# Carbon Dioxide Capture from Existing Coal-Fired Power Plants

**DOE/NETL-401/110907**

**Final Report (Original Issue Date, December 2006)**

**Revision Date, November 2007**

## Disclaimer

This report was prepared as an account of work sponsored by an agency of the United States Government. Neither the United States Government nor any agency thereof, nor any of their employees, makes any warranty, express or implied, or assumes any legal liability or responsibility for the accuracy, completeness, or usefulness of any information, apparatus, product, or process disclosed, or represents that its use would not infringe privately owned rights. Reference therein to any specific commercial product, process, or service by trade name, trademark, manufacturer, or otherwise does not necessarily constitute or imply its endorsement, recommendation, or favoring by the United States Government or any agency thereof. The views and opinions of authors expressed therein do not necessarily state or reflect those of the United States Government or any agency thereof.

# Carbon Dioxide Capture from Existing Coal-Fired Power Plants

---

**DOE/NETL-401/110907**

**Final Report (Original Issue Date, December 2006)**

**Revision Date, November 2007**

**NETL Contact:**

**Jared P. Ciferno**
**Office of Systems Analysis and Planning Division**

**Prepared by:**

**Massood Ramezan, Project Manager**
**Timothy J. Skone, Project Engineer**
**Research and Development Solutions, LLC**

**Nsakala ya Nsakala, and Gregory N. Liljedahl, Project Co-Leaders**
**Alstom Power Inc.**

**With Support From:**

**Loren E. Gearhart, Principal Investigator**
**ABB Lummus Global, Inc.**

**Rolf Hestermann, Principal Investigator**
**Alstom Power Generation AG**

**Barry Rederstorff, Host Site Advisor**
**American Electric Power**

**National Energy Technology Laboratory**
**www.netl.doe.gov**

This Page Intentionally Left Blank

# TABLE OF CONTENTS

**TABLE OF CONTENTS** ..... **i**
**LIST OF TABLES** ..... **iii**
**LIST OF FIGURES** ..... **vi**
**ACRONYMS AND ABBREVIATIONS** ..... **ix**
**ACKNOWLEDGMENTS** ..... **xi**

**EXECUTIVE SUMMARY** ..... **1**

**1 INTRODUCTION** ..... **1**
1.1 Background ..... 2
1.2 Current Study ..... 3
1.2.1 $CO_2$ Capture Level Sensitivity Study ..... 4
1.2.2 Solvent Regeneration Energy Sensitivity Study - A Look To The Future: ..... 5

**2 STUDY UNIT DESCRIPTION AND BASE CASE PERFORMANCE** ..... **9**
2.1 Study Unit Description ..... 9
2.2 Base Case Performance Analysis ..... 12
2.2.1 Calibration of the Boiler Computer Model ..... 12
2.2.2 Overall System Description and Material and Energy Balance (Base Case) ..... 13
2.2.3 Boiler Analysis Results (Base Case) ..... 16
2.2.4 Steam Cycle Performance (Base Case) ..... 17
2.2.5 Flue Gas Desulfurization System Analysis (Base Case) ..... 21

**3 THE SENSITIVITY OF PLANT PERFORMANCE AND ECONOMICS TO $CO_2$ CAPTURE LEVEL** ..... **23**
3.1 Study Unit Modifications and Definition of the Amine-Based $CO_2$ Capture Systems ..... 23
3.1.1 Design Basis for $CO_2$ Capture Systems Retrofit Equipment and Performance Calculations (Cases 1-5) ..... 24
3.1.2 Boiler Island Modifications and Performance (Cases 1-5) ..... 32
3.1.3 Design and Performance of Advanced Amine $CO_2$ Removal Systems (Cases 1-4) ..... 37
3.1.4 Process Description - $CO_2$ Removal, Compression, and Liquefaction System (Cases 1-4) ..... 37
3.1.5 Case 5/Concept A: Design and Performance of Kerr-McGee/ABB Lummus Amine $CO_2$ Removal System ..... 75
3.1.6 Steam Cycle Modifications, Performance, and Integration with Amine Process (Cases 1-5) ..... 96
3.1.7 Project Construction Schedule (Cases 1-5) ..... 111
3.2 Summary and Comparison of Overall Plant Performance and Carbon Dioxide Emissions (Cases 1-5) ..... 113
3.2.1 Auxiliary Power and Net Plant Output ..... 114
3.2.2 Net Plant Heat Rate and Thermal Efficiency ..... 115
3.2.3 $CO_2$ Emissions ..... 116
3.2.4 Steam Cycle Performance ..... 118
3.2.5 Boiler Performance ..... 119
3.3 Cost Analysis ..... 120
3.3.1 Cost Estimation Basis ..... 120
3.3.2 Carbon Dioxide Separation and Compression System Costs ..... 122

3.3.3 Boiler Modification Costs ..... 132
3.3.4 Flue Gas Desulfurization System Modification Costs ..... 132
3.3.5 Let Down Steam Turbine/Generator Costs ..... 133
3.3.6 Charges for Loss of Power During Construction ..... 133
3.3.7 Summary of Total Retrofit Investment Costs ..... 133
3.4 Economic Analysis ..... 136
3.4.1 Economic Study Scope and Assumptions ..... 136
3.4.2 Economic Analysis Results ..... 140

**4 ADVANCES IN POST COMBUSTION $CO_2$ CAPTURE TECHNOLOGIES ..... 147**

**5 SENSITIVITY OF PLANT PERFORMANCE AND ECONOMICS TO SOLVENT REGENERATION ENERGY ..... 149**
5.1 Performance Analysis ..... 150
5.1.1 Steam Cycle Modifications and Performance with Reduced Solvent Regeneration Energy ..... 154
5.2 Cost Analysis ..... 157
5.3 Economic Analysis ..... 157

**6 REPLACEMENT POWER DISCUSSION ..... 159**

**7 CONCLUSIONS AND RECOMMENDATIONS FOR FUTURE WORK ..... 161**

**8 BIBLIOGRAPHY ..... 164**

**9 APPENDICES ..... A-1**
9.1 Appendix I – Plant Drawings (Cases 1-5) ..... A-2
9.2 Appendix II - Equipment Lists (Cases 1-5) ..... B-1
9.3 Appendix III - Economic Sensitivity Studies (Cases 1-5) ..... C-1
9.3.1 Case 1 (90% $CO_2$ Capture) ..... C-2
9.3.2 Case 2 (70% $CO_2$ Capture) ..... C-4
9.3.3 Case 3 (50% $CO_2$ Capture) ..... C-6
9.3.4 Case 4 (30% $CO_2$ Capture) ..... C-8
9.4 Appendix IV – Let Down Turbine Technical Information (Cases 1 and 4) ..... D-1

# LIST OF TABLES

Table ES-1: Summary of Technical and Economic Performance for Retrofitting Pulverized Coal-Fired Plant ..... 3
Table ES- 2: Plant Performance and Economics vs. Solvent Regeneration Energy ..... 9

Table 1-1: Dakota Gasification Project's $CO_2$ Specification for EOR ..... 7

Table 2-1: Gas Side Material and Energy Balance (Base Case) ..... 14
Table 2-2: Overall Plant Performance Summary (Base Case) ..... 16
Table 2-3: Boiler/Turbine Steam Flows and Conditions (Base Case) ..... 17
Table 2-4: FGD System Analysis Assumptions ..... 22
Table 2-5: Existing FGD System Performance ..... 22

Table 3-1: Coal Analysis ..... 25
Table 3-2: Natural Gas Analysis ..... 25
Table 3-3: Flue Gas Analysis Entering Amine System (Cases 1-5) ..... 27
Table 3-4: $CO_2$ Product Specification ..... 27
Table 3-5: Key Parameters for Process Simulation ..... 28
Table 3-6: Soda Ash ($Na_2CO_3$) Requirements ..... 29
Table 3-7: Process Steam Conditions (reboilers) ..... 29
Table 3-8: Process Steam Conditions (reclaimer) ..... 29
Table 3-9: Cooling Water Conditions ..... 30
Table 3-10: Surface Condensate (for amine make-up) ..... 30
Table 3-11: Raw Water (fresh water) ..... 30
Table 3-12: Potable Water ..... 31
Table 3-13: Plant Air ..... 31
Table 3-14: Instrument Air ..... 31
Table 3-15: LP Fuel Gas (natural gas) ..... 31
Table 3-16: Power Supply Requirements ..... 31
Table 3-17: Modified FGD System Assumptions (Cases 1-5) ..... 33
Table 3-18: Modified FGD System Performance (Cases 1-5) ..... 33
Table 3-19: Gas Side Boiler Island Material and Material Energy Balance (Cases 1-5) ..... 36
Table 3-20: Overall Material Balance for Amine Plants (Cases 1-4; 90%-30% $CO_2$ Capture) ..... 48
Table 3-21: Energy and Process Demands (Cases 1-4; 90%-30% $CO_2$ Capture) ..... 49
Table 3-22: Case 1 Material & Energy Balance for CO2 Compression, Dehydration, and Liquefaction (90% $CO_2$ Recovery) ..... 51
Table 3-23: Case 2 Material and Energy Balance for $CO_2$ Compression, Dehydration, and Liquefaction (70% $CO_2$ Recovery) ..... 54
Table 3-24: Case 3 Material and Energy Balance for $CO_2$ Compression, Dehydration, and Liquefaction (50% $CO_2$ **Recovery)** ..... 57
Table 3-25: Case 4 Material and Energy Balance for $CO_2$ Compression, Dehydration, and Liquefaction (30% $CO_2$ Recovery) ..... 60
Table 3-26: $CO_2$ Product Specification and Calculated Product Comparison (Cases 1-4) ..... 62
Table 3-27: Chemical and Desiccants Consumption (lbm/day) for Cases-1-4 (90-30% $CO_2$ Recovery) ..... 62
Table 3-28: Equipment Summary - $CO_2$ Removal, Compression, and Liquefaction System (Cases 1-4) ..... 63
Table 3-29: Consumption of Utilities for Cases 1-4 (90%-30% $CO_2$ Recovery) ..... 64
Table 3-30: Auxiliary Power Usage for Case 1 (90% $CO_2$ Recovery) ..... 64

Table 3-31: Auxiliary Power Usage for Case 2 (70% $CO_2$ Recovery) ..... 65
Table 3-32: Auxiliary Power Usage for Case 3 (50% $CO_2$ Recovery) ..... 66
Table 3-33: Auxiliary Power Usage for Case 4 (30% CO2 Recovery) ..... 67
Table 3-34: Key Process Parameters for Simulation (Cases 1-4) ..... 68
Table 3-35: Reclaimer Bottoms Composition (Cases 1-4) ..... 70
Table 3-36: Filter Residue Composition (Cases 1-4) ..... 70
Table 3-37: Material and Energy Balance for Case 5/Concept A Amine System ..... 88
Table 3-38: Material and Energy Balance for Case 5/Concept A $CO_2$ Compression, Dehydration and Liquefaction System ..... 89
Table 3-39: Equipment Summary $CO_2$ Removal, Compression, and Liquefaction System (Cases 1, 5) ..... 90
Table 3-40: Utility Consumption for Case 5/Concept A ..... 91
Table 3-41: Auxiliary Power Usage for Case 5/Concept A ..... 91
Table 3-42: Chemicals and Desiccants Consumption for Case 5/Concept A ..... 92
Table 3-43: Key Process Parameters Comparison for Case 5/Concept A ..... 93
Table 3-44: Reclaimer Bottoms Composition for Case 5/Concept A ..... 94
Table 3-45: Filter Residue Composition for Case 5/Concept A ..... 94
Table 3-46: Cooling Tower Blowdown Composition Limitations – Case 5/Concept A ..... 95
Table 3-47: Expected Steam Conditions at Extraction Points for 30% $CO_2$ Removal ..... 110
Table 3-48: Plant Performance and $CO_2$ Emissions Comparison (Base Case and Cases 1-5) ..... 113
Table 3-49: Prices for Consumables ..... 122
Table 3-50: Project and Process Contingencies ..... 122
Table 3-51: Case 1 (90% Capture) $CO_2$ Separation and Compression System Investment Costs ..... 123
Table 3-52: Case 1 (90% Capture) $CO_2$ Separation and Compression System Operating & Maintenance Costs ..... 124
Table 3-53: Case 2 (70% Capture) $CO_2$ Separation and Compression System Investment Costs ..... 125
Table 3-54: Case 2 (70% Capture) $CO_2$ Separation and Compression System Operating & Maintenance Costs ..... 126
Table 3-55: Case 3 (50% Capture) $CO_2$ Separation and Compression System Investment Costs ..... 127
Table 3-56: Case 3 (50% Capture) $CO_2$ Separation and Compression System Operating & Maintenance Costs ..... 128
Table 3-57: Case 4 (30% Capture) $CO_2$ Separation and Compression System Investment Costs ..... 129
Table 3-58: Case 4 (30% Capture) $CO_2$ Separation and Compression System Operating & Maintenance Costs ..... 130
Table 3-59: Case 5/Concept A (96% Capture) $CO_2$ Separation and Compression System Investment Costs ..... 131
Table 3-60: Case 5/Concept A (96% Capture) $CO_2$ Separation and Compression System Operating & Maintenance Costs ..... 132
Table 3-61: Let Down Turbine Generator Costs and Electrical Outputs for Cases 1-5 (D&R Cost Basis) ..... 133
Table 3-62: Total Retrofit Investment Costs (Cases 1-5) ..... 134
Table 3-63: $CO_2$ Removal, Compression, and Liquefaction System Equipment Summary (Cases 1-5) ..... 135
Table 3-64: Base Economic Assumptions (Base Case and Cases 1-5) ..... 138
Table 3-65: Economic Evaluation Study Assumptions (Base Case and Cases 1-5) ..... 139
Table 3-66: Economic Sensitivity Study Parameters ..... 140

Table 3-67: Economic Results (Cases 1-4) ..... 141
Table 3-68: Economic Results for Cases 1 and 5 ..... 144

Table 4-1: List of Selected Advanced Post-Combustion $CO_2$ Capture Technologies ..... 147

Table 5-1: Solvent Regeneration Energy for Amine Based $CO_2$ Capture Systems ..... 149
Table 5-2: Plant Performance and $CO_2$ Emissions vs. Solvent Regeneration Energy ..... 152
Table 5-3: Incremental Cost of Electricity Breakdown & Mitigation Costs ..... 157

Table 9-1: Case 1 $CO_2$ Capture System Equipment List with Data (90% $CO_2$ Recovery) ..... 1
Table 9-2: Case 2 $CO_2$ Capture System Equipment List with Data (70% $CO_2$ Recovery) ..... 2
Table 9-3: Case 3 $CO_2$ Capture System Equipment List with Data (50% $CO_2$ Recovery) ..... 3
Table 9-4: Case 4 $CO_2$ Capture System Equipment List with Data (30% $CO_2$ Recovery) ..... 4
Table 9-5: Case 5/Concept A $CO_2$ Capture System Equipment List with Data (96% $CO_2$ Recovery) ..... 5
Table 9-6: Case 1 (90% $CO_2$ Capture) ..... 2
Table 9-7: Case 2 (70% $CO_2$ Capture) ..... 4
Table 9-8: Case 3 (50% $CO_2$ Capture) ..... 6
Table 9-9: Case 4 (30% $CO_2$ Capture) ..... 8
Table 9-10: Case 5 (96% $CO_2$ Capture) ..... 10

# LIST OF FIGURES

Figure ES-1: Incremental Levelized Cost of Electricity (LCOE) and $CO_2$ Mitigation Cost of Retrofitting a Pulverized Coal-fired Plant at Various Levels of Carbon Capture ..... 1
Figure ES-2: Affect of $CO_2$ Capture Rate on the Total Investment Cost for Retrofitting a Pulverized Coal-Fired Plant ..... 4
Figure ES-3: Plant Performance Impact of Retrofitting a Pulverized Coal-fired Plant at Various Levels of Carbon Capture ..... 5
Figure ES-4: Reduction in Carbon Dioxide Emissions to the Environment ..... 7
Figure ES-5: Economic Sensitivity Results (Case 1, 90% $CO_2$ Capture) ..... 8

Figure 1-1: Post-Combustion Amine-Based $CO_2$ Capture Retrofit ..... 2

Figure 2-1: Conesville Power Station ..... 9
Figure 2-2: Study Unit Boiler (Existing Conesville Unit #5 Steam Generator) ..... 10
Figure 2-3: Simplified Gas Side Process Flow Diagram (Base Case) ..... 13
Figure 2-4: Selected Conesville #5 Turbine Heat Balance (basis for steam turbine modelin)g ..... 19
Figure 2-5: Steam Cycle Diagram and Performance (Base Case) ..... 20
Figure 2-6: Steam Cycle Mollier Diagram (Base Case) ..... 21
Figure 2-7: Existing Flue Gas Desulfurization System Process Flow Diagram ..... 22

Figure 3-1: AEP Conesville, Ohio, Electric Power Generation Station Site and New Equipment Locations (Cases 1-4) ..... 26
Figure 3-2: Modified FGD System Simplified Process Flow Diagram (Cases 1-5) ..... 32
Figure 3-3: New Secondary $SO_2$ Scrubber Location (Cases 1-4) ..... 34
Figure 3-4: Simplified Boiler Island Gas Side Process Flow Diagram for $CO_2$ Separation by Monoethanolamine Absorption (Cases 1-5) ..... 35
Figure 3-5: Advanced MEA Process Flow Diagram (Cases 1-4) ..... 45
Figure 3-6: $CO_2$ Compression (Cases 1-4) ..... 46
Figure 3-7: Flue Gas Bypass System used for 70%, 50%, and 30% $CO_2$ Absorption Cases (Cases 2, 3, and 4) ..... 47
Figure 3-8: Case 1 $CO_2$ Compression, Dehydration, and Liquefaction Schematic (90% $CO_2$ Recovery) ..... 50
Figure 3-9: Case 2 $CO_2$ Compression, Dehydration, and Liquefaction Schematic (70% $CO_2$ Recovery) ..... 53
Figure 3-10: Case 3 $CO_2$ Compression, Dehydration, and Liquefaction Schematic (50% $CO_2$ Recovery) ..... 56
Figure 3-11: Case 4 $CO_2$ Compression, Dehydration, and Liquefaction Schematic (30% $CO_2$ Recovery) ..... 59
Figure 3-12: Equipment Variations – $CO_2$ Removal, Compression, and Liquefaction Systems (Cases 1-4) ..... 63
Figure 3-13: Reboiler Pressure Optimization Study Results (Case 1) ..... 69
Figure 3-14: Conesville Unit #5 Existing Flue Gas Desulfurization System Scrubbers and Stack ..... 72
Figure 3-15: Conesville Unit #5 Existing Turbine Building ..... 73
Figure 3-16: Conesville Unit #5 Existing LP Turbine and IP/LP Crossover Pipe ..... 74
Figure 3-17: Existing Conesville Cooling Towers & $CO_2$ Compression/Liquefaction System Location ..... 75

Figure 3-18: Process Flow Diagram for Case 5/Concept A: Flue Gas Cooling and $CO_2$ Absorption ..... 84
Figure 3-19: Process Flow Diagram for Case 5/Concept A: Solvent Stripping ..... 85
Figure 3-20: Process Flow Diagram for Case 5/Concept A: $CO_2$ Compression, Dehydration, and Liquefaction ..... 86
Figure 3-21: Modified Steam/Water Schematic (simplified) ..... 97
Figure 3-22: Case 1 – Modified Water-Steam Cycle for 90% $CO_2$ Removal ..... 100
Figure 3-23: Case 2 – Modified Water-Steam Cycle for 70% $CO_2$ Removal ..... 102
Figure 3-24: Case 3 – Modified Water-Steam Cycle for 50% $CO_2$ Removal ..... 104
Figure 3-25: Case 4 – Modified Water-Steam Cycle for 30% $CO_2$ Removal ..... 106
Figure 3-26: Case 5/Concept A – Modified Water-Steam Cycle for 96% $CO_2$ Removal ..... 107
Figure 3-27: Case 5/Concept A – Modified Water-Steam Cycle Mollier Diagram for 96% $CO_2$ Removal ..... 108
Figure 3-28: Existing LP Turbine at Conesville Unit #5 ..... 109
Figure 3-29: Typical Retrofit Solution for the Conesville Unit #5 LP Turbine Type ..... 111
Figure 3-30: Project Construction Scheduled (Cases 1-5) ..... 112
Figure 3-31: Plant Auxiliary Power & Net Electrical Output (MWe) ..... 114
Figure 3-32: Plant Thermal Efficiency (HHV Basis) ..... 115
Figure 3-33: Plant Thermal Efficiency vs. Capture Level ..... 115
Figure 3-34: Plant Thermal Efficiency Loss Relative to Base Case (HHV Basis) ..... 116
Figure 3-35: Carbon Dioxide Distribution ..... 117
Figure 3-36: Specific Carbon Dioxide Emissions ..... 117
Figure 3-37: Specific Carbon Dioxide Emissions vs. $CO_2$ Capture Level ..... 118
Figure 3-38: Total Generator Output (existing + new let down turbine generator) ..... 119
Figure 3-39: New Equipment Specific Investment Costs ..... 134
Figure 3-40: Economic Results (Cases 1-4) ..... 142
Figure 3-41: Impact of $CO_2$ Capture Level on Incremental LCOE and $CO_2$ Mitigation Cost (Cases 1-4) ..... 142
Figure 3-42: Economic Results for Case 1 and Case 5 ..... 145
Figure 3-43: Economic Sensitivity Results (Case 1 - 90% $CO_2$ Capture) ..... 146

Figure 5-1: Plant Gross and Net Output vs. Solvent Regeneration Energy ..... 153
Figure 5-2: Plant Thermal Efficiency and Efficiency Loss vs. Solvent Regeneration Energy ..... 154
Figure 5-3: Plant $CO_2$ Emissions vs. Solvent Regeneration Energy ..... 154
Figure 5-4: Case 1a – Modified Water-Steam Cycle (90% Capture: 1,200 Btu/lbm Solvent Regeneration Energy) ..... 156
Figure 5-5: Incremental LCOE Breakdown and $CO_2$ Mitigation Cost ..... 158
Figure 5-6: Incremental LCOE and Mitigation Cost vs. Solvent Regeneration Energy ..... 158

Figure 9-1: Existing Overall Site (before $CO_2$ Unit Addition) ..... 3
Figure 9-2: Cases 1-4 Flue Gas Cooling & $CO_2$ Absorption Equipment Layout ..... 5
Figure 9-3: Cases 1-4 Solvent Stripping and Compression Equipment Layout ..... 6
Figure 9-4: Cases 1-4 Overall Plot Plan for Modified Conesville Unit #5 ..... 7
Figure 9-5: Case 5/Concept A – Flue Gas Cooling & $CO_2$ Absorption Equipment Layout ..... 9
Figure 9-6: Case 5/Concept A – Solvent Stripping Equipment Layout ..... 10
Figure 9-7: Case 5/Concept A – $CO_2$ Compression & Liquefaction Equipment Layout ..... 11
Figure 9-8: Case 5/Concept A – Overall Equipment Layout Conceptual Plan ..... 12
Figure 9-9: Case 5/Concept A – Overall Plot Plan for Modified Conesville Unit #5 ..... 13
Figure 9-10: Case 1 Sensitivity Studies (90% $CO_2$ Capture) ..... 3

Figure 9-11: Case 2 Sensitivity Studies (70% $CO_2$ Capture) ..... 5
Figure 9-12: Case 2 Sensitivity Studies (50% $CO_2$ Capture) ..... 7
Figure 9-13: Case 4 Sensitivity Studies (30% $CO_2$ Capture) ..... 9
Figure 9-14: Case 5 Sensitivity Studies (96% $CO_2$ Capture) ..... 11
Figure 9-15: Typical General Outline Arrangement for LDT Generator for Case 1 (90% Recovery) ..... 7
Figure 9-16: Turbine Generator General Arrangement (Case 1: 90% removal) ..... 8
Figure 9-17: Typical General Outline Arrangement for LDT Generator for Case 4 (30% Recovery) ..... 9
Figure 9-18: Turbine Generator General Arrangement for Case 4 (30% removal) ..... 10

# ACRONYMS AND ABBREVIATIONS

| | |
|---|---|
| ABB | ABB Lummus Global Inc. |
| AEP | American Electric Power |
| ANSI | American National Standards Institute |
| APC | Air Pollution Control System |
| AST | Adiabatic Saturation Temperature |
| bara | Bar absolute |
| barg | Bar gauge |
| BI | Boiler Island |
| B.L. | Boundary Limit |
| BOP | Balance of Plant |
| Btu | British Thermal Unit |
| cm $H_2O$ | Centimeters of water |
| $CO_2$ | Carbon Dioxide |
| COE | Cost of Electricity |
| DCC | Direct Contact Cooler |
| DOE/NETL | Department of Energy/National Energy Technology Laboratory |
| EOR | Enhanced Oil Recovery |
| EPC | Engineered, Procured, and Constructed |
| ESP | Electrostatic Precipitator |
| FD | Forced Draft |
| FGD | Flue Gas Desulfurization |
| FOM | Fixed Operation & Maintenance |
| GHG | Greenhouse Gases |
| gpm | Gallons per Minute |
| GPS | Gas Processing System |
| g | Grams |
| HHV | Higher Heating Value |
| HP | High Pressure |
| hr | Hour |
| HSS | Heat Stable Salts |
| ID | Induced Draft |
| in. $H_2O$ | Inches of Water |
| in. Hga | Inches of Mercury, Absolute |
| IP | Intermediate Pressure |
| IRI | Industrial Risk Insurers |
| ISO | International Standards Organization |
| J | Joules |
| kg | Kilograms |
| kWe | Kilowatts electric |
| kWh | Kilowatt-hour |
| LAM | Lean MEA solution |

| | |
|---|---|
| lbm | Pound mass |
| LDT | Let Down Turbine |
| LHV | Lower Heating Value |
| LP | Low Pressure |
| LT | Low Temperature |
| MCC | Motor Control Center |
| MCR | Maximum Continuous Rating |
| MEA | Monoethanolamine |
| MJ | Mega joules |
| MMBtu | Million of British Thermal Units |
| MWe | Megawatt Electric |
| MUPC | Make-up Power Cost |
| NGCC | Natural Gas Combined Cycle |
| NPSH | Net Positive Suction Head |
| $N_2$ | Nitrogen Gas |
| OCDO | Ohio Coal Development Office |
| OSBL | Outside Boundary Limits |
| O&M | Operation & Maintenance |
| PA | Primary Air |
| PC | Pulverized Coal |
| PFD | Process Flow Diagram |
| PFWH | Parallel Feedwater Heater |
| PHX | Primary Heat Exchanger |
| PLC | Programmable Logic Controller |
| ppm | Parts per million |
| psia | Pound per square inch, absolute |
| psig | Pound per square inch, gauge |
| RDS | Research and Development Solutions |
| s | Second |
| SA | Secondary Air |
| SCPC | Supercritical Pulverized Coal |
| TIC | Total Investment Cost |
| TPD | Ton Per Day |
| VOM | Variable Operation & Maintenance |

# ACKNOWLEDGMENTS

The authors appreciatively acknowledge the following people for their contributions to the successful performance of the work presented herein: Mark Borman and Tom Ross of AEP Conesville, Ohio, Plant for providing field unit information; Bill Anderson and Paul Milios of ABB Lummus Global for providing cost estimation and technical support respectively; Neil Canvin, Aku Rainio, Ray Chamberland, Glen Jukkola, and Larry Cellilli from Alstom for providing steam turbine modeling and analysis, economic analysis, contract administration, technical guidance, and project accounting respectively.

# EXECUTIVE SUMMARY

There is growing concern that emissions of carbon dioxide ($CO_2$) and other greenhouse gases (GHG) to the atmosphere is resulting in climate change with undefined consequences. This has led to a comprehensive program to develop technologies to reduce $CO_2$ emissions from coal-fired power plants. New technologies, based upon both advanced combustion and gasification technologies hold promise for economically achieving $CO_2$ reductions through improved efficiencies. However, if the United States decides to embark on a $CO_2$ emissions control program employing these new and cleaner technologies in new plants only, it may not be sufficient. It may also be necessary to reduce emissions from the existing fleet of power plants.

This study was performed to evaluate the technical and economic feasibility of various levels of $CO_2$ capture (e.g., 90%, 70%, 50%, and 30%) for retrofitting an existing pulverized coal-fired power plant (Conesville #5 unit in Ohio) using advanced amine-based capture technology. Impacts on plant output, efficiency, and $CO_2$ emissions, resulting from addition of the $CO_2$ capture systems on an existing coal-fired power plant were considered. Cost estimates were developed for the systems required to produce, extract, clean, and compress $CO_2$, which could then be available for sequestration and/or other uses such as enhanced oil or gas recovery. Results are reported in terms of the incremental cost of electricity, levelized over 20 years, (LCOE) to retrofit and operate an existing pulverized coal-fired power plant at various levels of carbon capture. The cost of $CO_2$ mitigation is also reported for each level of carbon capture. Summary results are presented in Figure ES-1 and summarized in Table ES-1.

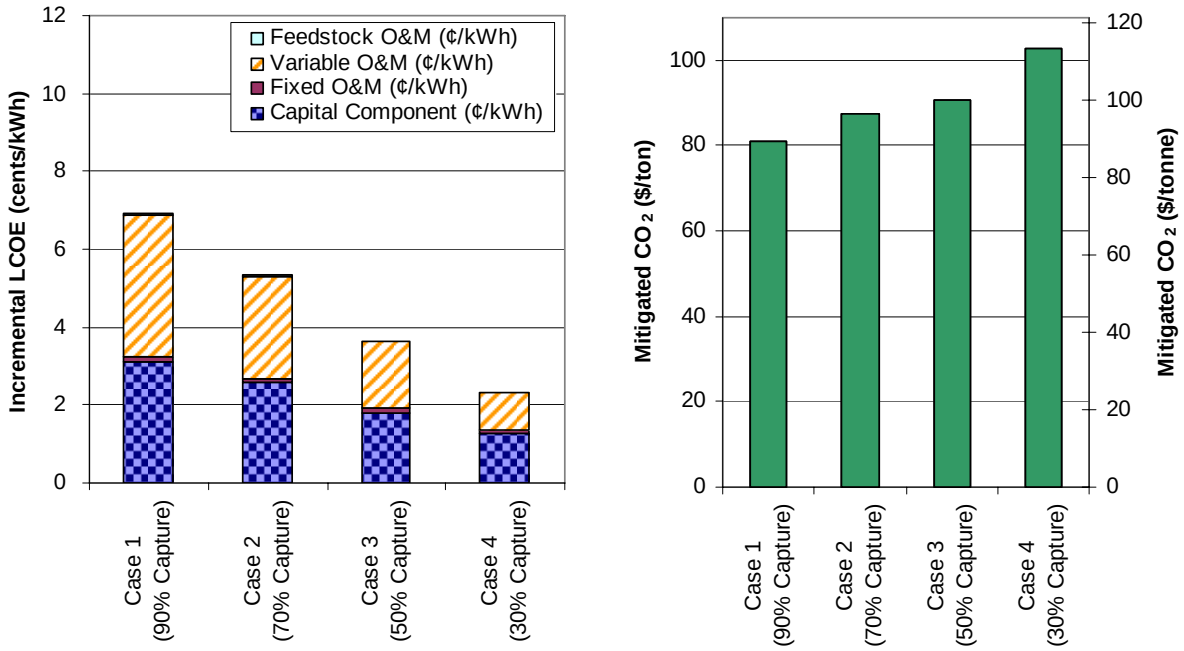


**Figure ES-1: Incremental Levelized Cost of Electricity (LCOE) and $CO_2$ Mitigation Cost of Retrofitting a Pulverized Coal-fired Plant at Various Levels of Carbon Capture**

The results demonstrate an almost linear relationship between the percent change in carbon capture and the incremental LCOE and $CO_2$ mitigation cost across the study range of 90% to 30% capture. A 10% reduction in the level of carbon capture equates to approximately an 11% reduction in the incremental LCOE and a 4% increase in the $CO_2$ mitigation cost.

## Description of Plant Retrofit for Incorporating Carbon Capture Technology

A simplified process flow diagram for the study unit, modified with the addition of the post-combustion amine-based capture system, is shown in below. This simplified diagram is applicable to each of the $CO_2$ capture cases included in this study. The operation and performance of the existing boiler, air heater, and electrostatic precipitator (ESP) systems are identical to the Base Case for all the capture cases investigated and are not affected by the addition of the post-combustion amine-(MEA)-based $CO_2$ recovery systems.

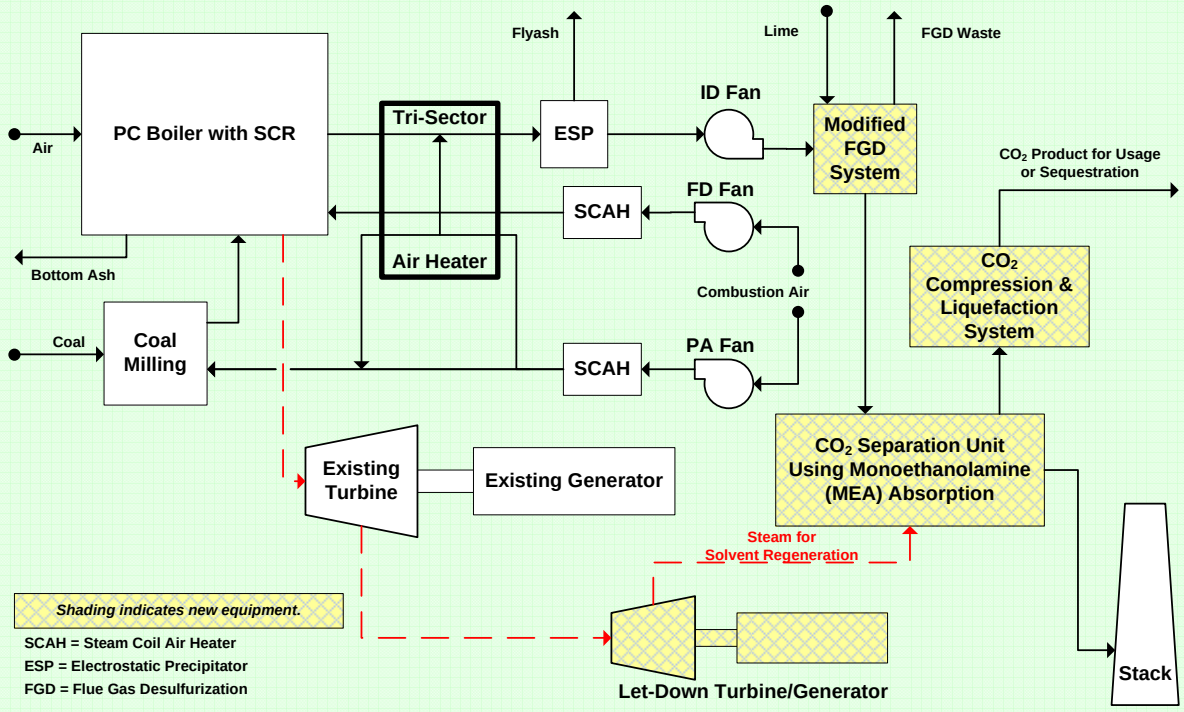


**Simplified Process Flow Diagram for Power Plant Modified with the Addition of an Advanced Amine Based $CO_2$ Capture System**

The flue gas desulfurization (FGD) system is modified identically for each of the cases with the addition of a secondary absorber to reduce the $SO_2$ content of the flue gas entering the new amine system to below 10 ppmv. Recovery of less than 90% $CO_2$ (Cases 2, 3, and 4 with 70%, 50%, and 30% recovery respectively) is accomplished by bypassing a fraction of the total flue gas stream around the new $CO_2$ absorber. Flue gas bypass was determined to be the least costly way to obtain lower $CO_2$ recovery levels.

**Table ES-1: Summary of Technical and Economic Performance for Retrofitting a Pulverized Coal-Fired Plant**

| Case | Units | Base Case | Case 1 (90% Capture) | Case 2 (70% Capture) | Case 3 (50% Capture) | Case 4 (30% Capture) |
|---|---|---|---|---|---|---|
| **Boiler Parameters** | | | | | | |
| Main Steam Flow | lb/hr | 3,131,619 | 3,131,651 | 3,131,651 | 3,131,651 | 3,131,651 |
| Main Steam Pressure | psia | 2,535 | 2,535 | 2,535 | 2,535 | 2,535 |
| Main Steam Temp | Deg F | 1,000 | 1,000 | 1,000 | 1,000 | 1,000 |
| Reheat Steam Temp | Deg F | 1,000 | 1,000 | 1,000 | 1,000 | 1,000 |
| Boiler Efficiency | Percent | 88.1 | 88.1 | 88.1 | 88.1 | 88.1 |
| Coal Heat Input, HHV | $10^6$ Btu/hr | 4,228.7 | 4,228.7 | 4,228.7 | 4,228.7 | 4,228.7 |
| | | | | | | |
| **$CO_2$ Removal System Parameters** | | | | | | |
| Solvent Regeneration Energy | Btu/lbm-$CO_2$ | n/a | 1,550 | 1,550 | 1,550 | 1,550 |
| Steam Pressure | psia | n/a | 47 | 47 | 47 | 47 |
| Steam Extraction Flow | lb/hr | n/a | 1,210,043 | 940,825 | 671,949 | 403,170 |
| Natural Gas Heat Input, HHV | $10^6$ Btu/hr | n/a | 13.0 | 9.7 | 6.7 | 4.2 |
| | | | | | | |
| **Steam Cycle Parameters** | | | | | | |
| Existing Steam Generator Output | kW | 463,478 | 342,693 | 370,700 | 398,493 | 425,787 |
| $CO_2$ Removal System Generator Output | kW | n/a | 45,321 | 35,170 | 25,031 | 14,898 |
| Total Turbine Generator Output | kW | 463,478 | 388,014 | 405,870 | 423,524 | 440,685 |
| Auxillary Power: Existing Plant | kW | 29,700 | 29,758 | 29,928 | 30,113 | 30,306 |
| Auxillary Power: $CO_2$ Removal System | kW | n/a | 54,939 | 42,697 | 30,466 | 18,312 |
| Net Plant Power | kW | 433,778 | 303,317 | 333,245 | 362,945 | 392,067 |
| | | | | | | |
| **Plant Performance Parameters** | | | | | | |
| Net Plant Heat Rate, HHV | Btu/kWh | | 13,984 | 12,728 | 11,686 | 10,818 |
| Net Plant Efficiency, HHV | Percent | 35.01 | 24.5 | 26.9 | 29.3 | 31.7 |
| Energy Penalty | Percent | 0 | 10.5 | 8.1 | 5.7 | 3.3 |
| Capacity Factor | Percent | 85 | 85 | 85 | 85 | 85 |
| | | | | | | |
| **Plant $CO_2$ Profile** | | | | | | |
| $CO_2$ Produced | lb/hr | 866,102 | 867,595 | 867,212 | 866,872 | 866,585 |
| $CO_2$ Captured | lb/hr | 0 | 779,775 | 607,048 | 433,606 | 260,164 |
| $CO_2$ Emissions | lb/hr | 866,102 | 87,820 | 260,164 | 433,266 | 606,421 |
| | | | | | | |
| **Incremental Capital and O&M Costs** | | | | | | |
| Total Investment Cost | $1,000 | n/a | 400,094 | 365,070 | 280,655 | 211,835 |
| Total Investment Cost | $/kW | n/a | 1,319 | 1,095 | 773 | 540 |
| Fixed O&M Costs | $1000/yr | n/a | 2,494 | 2,284 | 2,079 | 1,869 |
| Variable O&M Costs | $1000/yr | n/a | 17,645 | 14,711 | 10,876 | 7,019 |
| Levelized, Make-up Power Cost | $1000/yr | n/a | 62,194 | 47,926 | 33,768 | 19,885 |
| $CO_2$ By-product Revenue | $1000/yr | n/a | 0 | 0 | 0 | 0 |
| Feedstock (natural gas) O&M Costs | $1000/yr | n/a | 653 | 488 | 337 | 211 |
| | | | | | | |
| **Incremental LCOE Contributions** | | | | | | |
| Capital Component | ¢/kWh | n/a | 3.10 | 2.57 | 1.82 | 1.27 |
| Fixed O&M | ¢/kWh | n/a | 0.13 | 0.11 | 0.09 | 0.07 |
| Variable O&M | ¢/kWh | n/a | 3.66 | 2.62 | 1.72 | 0.96 |
| Feedstock O&M | ¢/kWh | n/a | 0.03 | 0.02 | 0.01 | 0.01 |
| Total | ¢/kWh | n/a | 6.92 | 5.32 | 3.64 | 2.31 |
| | | | | | | |
| $CO_2$ Mitigation Cost | $/ton | n/a | 81 | 88 | 91 | 103 |
| $CO_2$ Mitigation Cost | $/tonne | n/a | 89 | 96 | 100 | 113 |
| $CO_2$ Capture Cost | $/ton | n/a | 54 | 58 | 61 | 70 |
| $CO_2$ Capture Cost | $/tonne | n/a | 59 | 64 | 67 | 77 |

## Percent Change in Retrofit Investment Costs Show a Linear Correlation with $CO_2$ Capture Rate

The total investment required to retrofit an existing plant is also dependant on the level of carbon capture. Reductions in boiler modification costs and carbon capture equipment size are the primary factors. Figure ES-2 shows an almost linear relationship between percent $CO_2$ capture and total investment cost (TIC) based on the retrofitted plant net power output. As a result, this study shows a 10% reduction in $CO_2$ capture causes approximately a 10% reduction in the required retrofit investment across the study range of 90% to 30% capture. Table ES-1 summarizes the TIC on a $/kW-net and per $1000 dollar basis for each $CO_2$ capture rate.

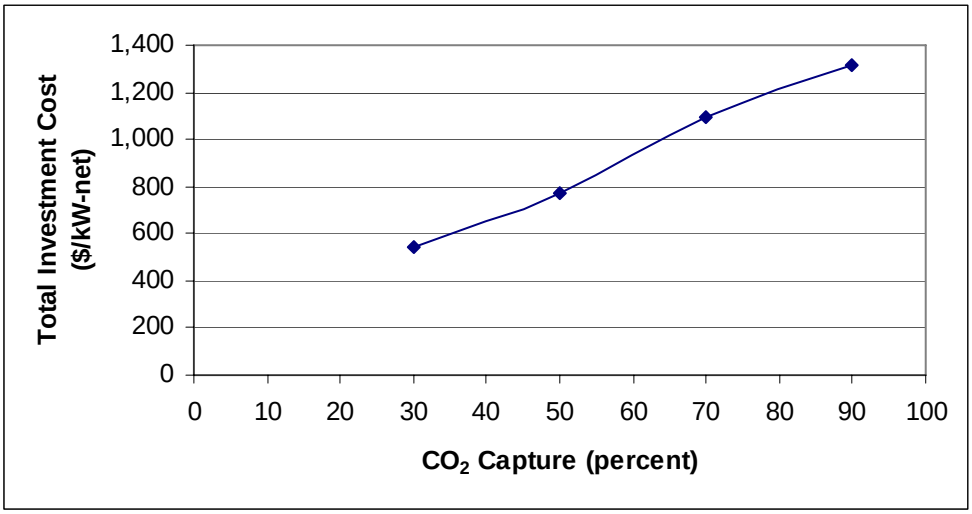


**Figure ES-2: Affect of $CO_2$ Capture Rate on the Total Investment Cost for Retrofitting a Pulverized Coal-Fired Plant**

**Retrofit Investment and Operating Costs Included in the Study**

The project capital cost estimates (July, 2006 cost date) include all required retrofit equipment such as the amine-based $CO_2$ scrubbing systems, the modified flue gas desulfurization (FGD) system, the $CO_2$ compression and liquefaction systems, and steam cycle modifications. Boiler island modifications other than for the FGD system are not required.

Operating and maintenance (O&M) costs were calculated for all systems. The O&M costs for the Base Case were provided by AEP. For the retrofit $CO_2$ capture system evaluations, additional O&M costs were calculated for the new equipment. The variable O&M (VOM) costs for the new equipment included such categories as chemicals and desiccants, waste handling, maintenance material and labor, and contracted services. A make-up power cost (MUPC) for the reduction in net power production is also included in the VOM costs. A levelized MUPC of 6.40 ¢/kWh-net, equivalent to a new subcritical pulverized coal (bituminous) power plant without carbon capture, was determined for each Case included within the study. The fixed O&M (FOM) costs for the new equipment include operating labor only.

### Adding $CO_2$ Capture Technology Impacts Net Plant Output and Thermal Efficiency

Significant reductions in net plant output are incurred (10%-30% for Cases 1-4) as a result of the $CO_2$ capture system. For example, capturing 90% of the carbon reduces the net plant output from 433.8 MW to 303.3 MW. The capture system design includes a let down steam turbine generator that contributes 45.3 MW to the existing steam turbine generator output. Inclusion of the let down steam turbine improves the technical performance and lowers the incremental LCOE for retrofitting a pulverized coal-fired power plant with carbon capture technology.

Net plant thermal efficiency is also reduced from about 35.0% (HHV basis) for the Base Case to 24.4% - 31.6% for Cases 1-4. The efficiency reductions are due to reductions in the steam turbine output due to steam extraction for solvent regeneration and significant auxiliary power requirement increases as shown in Table ES-1. The auxiliary power increases are primarily due to the $CO_2$ compression and liquefaction system. The efficiency decrease is essentially a linear function of $CO_2$ recovery level over the range of $CO_2$ capture investigated.

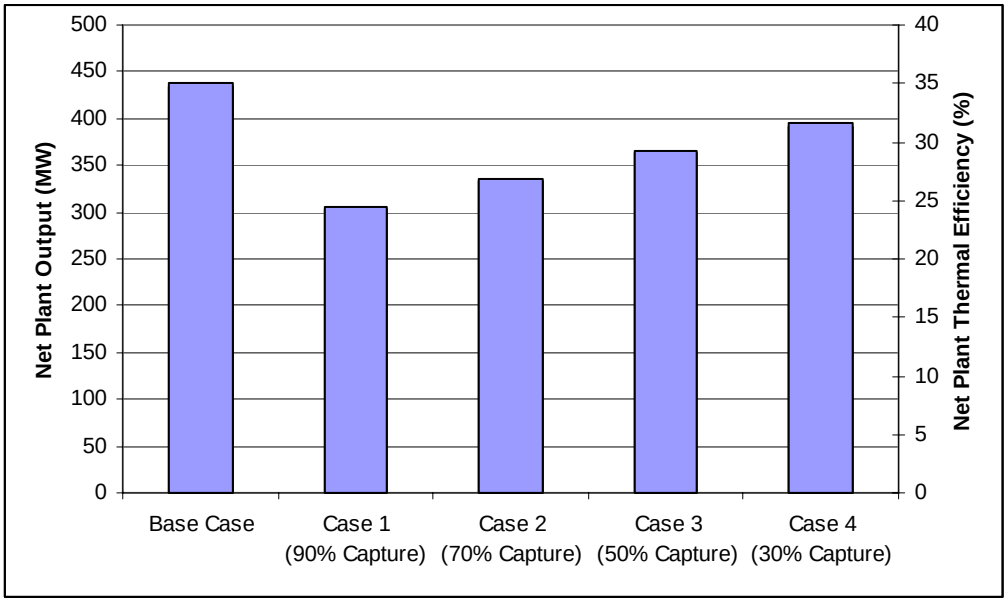


**Figure ES-3: Plant Performance Impact of Retrofitting a Pulverized Coal-Fired Plant at Various Levels of Carbon Capture**

### Retrofitting Existing Coal-fired Plants Can Help Reduce U.S. GHG Emissions

Specific carbon dioxide emissions were reduced from about 908 g/kWh (2 lbm/kWh) for the Base Case to between 59-704 g/kWh (0.13-1.55 lbm/kWh) depending on $CO_2$ recovery level as

shown in

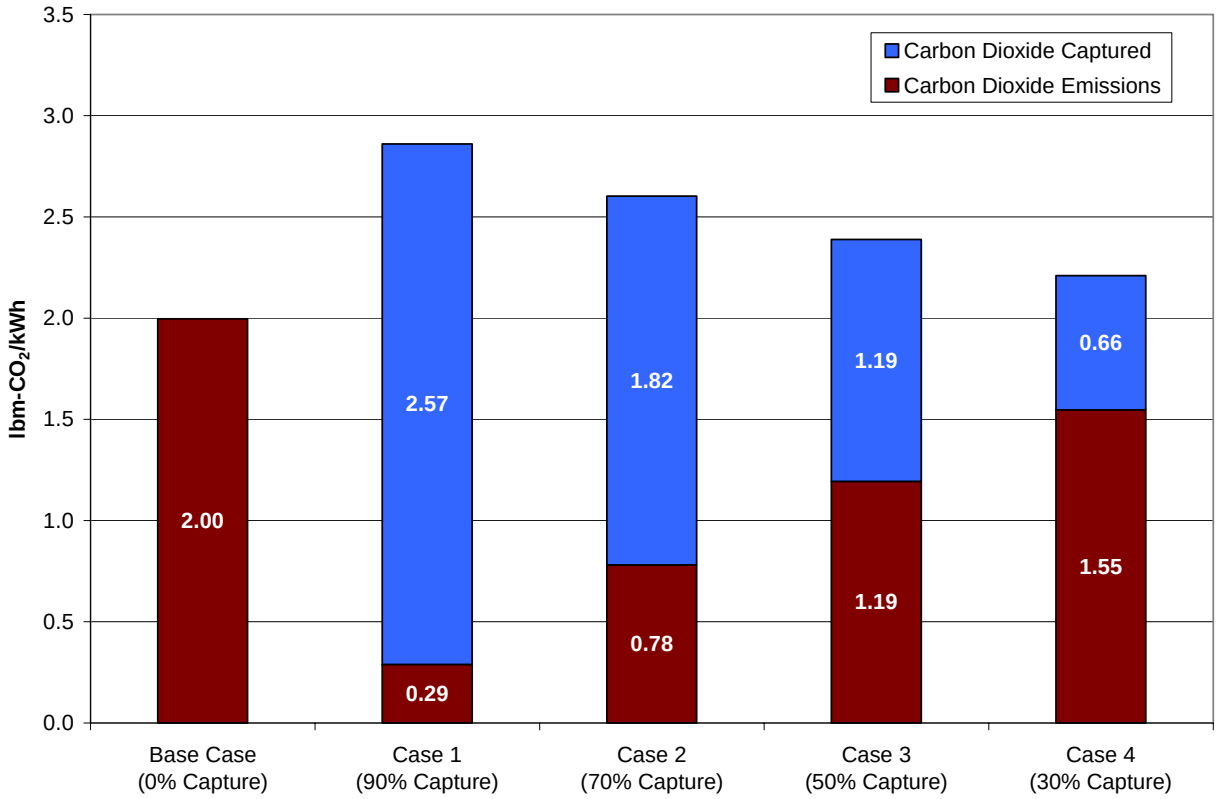


Figure ES-4. This corresponds to between 6.6% and 77.5% of the Base Case carbon dioxide emissions. The mass of carbon dioxide produced in each case is relatively the same[1], however the significant reduction in net power production in each of the retrofit cases (Cases 1-4) results in a higher $CO_2$ production rate per kilowatt-hour of power produced. Table ES-1 summarizes the mass of $CO_2$ produced, emitted, and captured for each case on a pound per hour basis. The mass of $CO_2$ emissions avoided is determined as the difference per kilowatt-hr in $CO_2$ emissions relative to the Base Case. For example, Case 1 (90% capture) emits 0.29 lbm-$CO_2$/kWh and the Base Case emits 2.00 lbm-$CO_2$/kWh. The difference is 1.71 lbm-$CO_2$/kWh. An 85.5% reduction in $CO_2$ released to the environment per kilowatt-hour of power produced.

[1] Coal feed rate is unchanged from the Base Case to each of the retrofit cases (Cases 1-4). A small amount of supplemental natural gas is utilized to regenerate the solvent media in the carbon capture system, therefore, adding to the total mass of $CO_2$ produced.

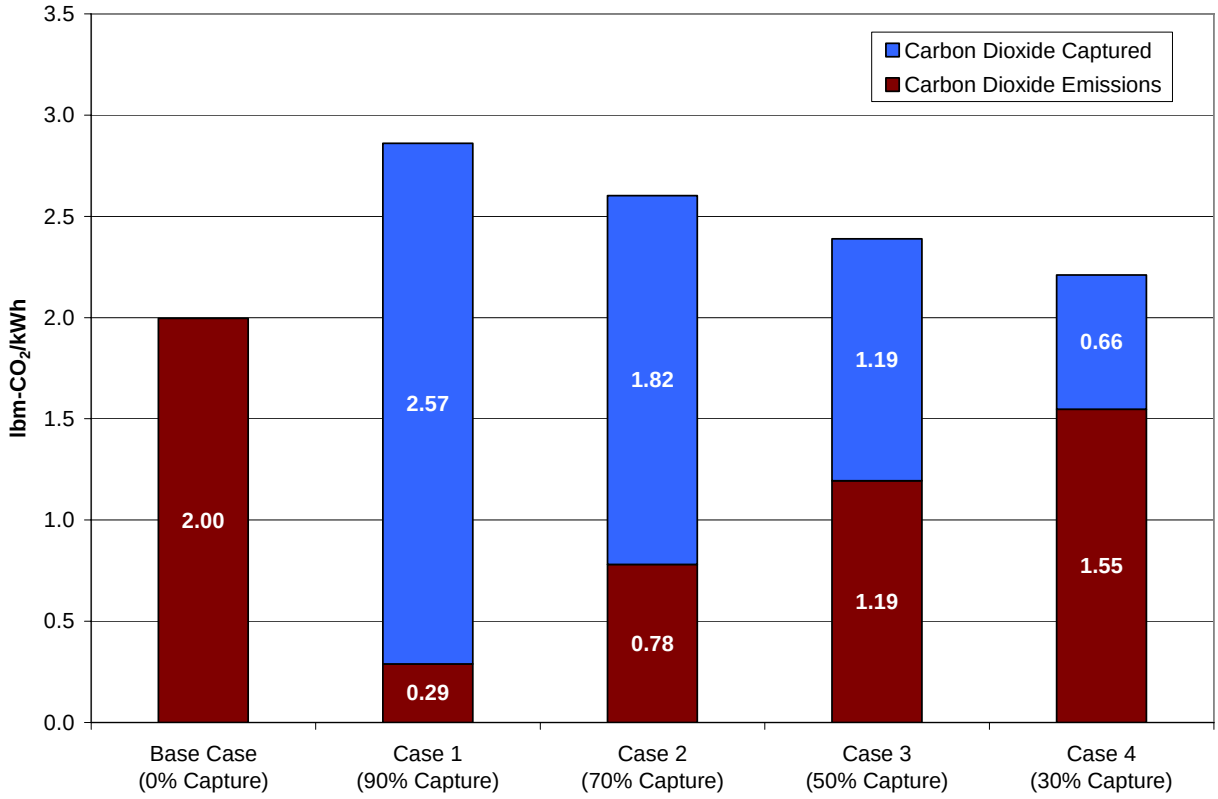


**Figure ES-4: Reduction in Carbon Dioxide Emissions to the Environment**

## Sensitivity Analysis Results Demonstrate a Range of Scenarios for Evaluating the Benefits of Retrofitting Pulverized Coal-fired Plants with Carbon Capture Technology

Specific results from this study are limited to the retrofit of AEP's Conesville Unit #5. Therefore, a sensitivity analysis of the key economic variables was conducted to evaluate the applicability of retrofitting other pulverized coal-fired power plants with carbon capture technology. The economic sensitivity analysis was done by varying a number of parameters (Capacity Factor, Total Investment Cost, Make-up Power Cost, and $CO_2$ By-product Selling Price) that affect the economic results. These sensitivity parameters were chosen since the base values used for these parameters are site specific to this study.

The objective of this analysis was to determine the relative impacts of the sensitivity parameters and $CO_2$ capture level on incremental cost of electricity and $CO_2$ mitigation cost. The sensitivity analysis was conducted for each case analyzed within this study. The economic sensitivity results obtained from Case 1 (90% capture) are briefly discussed below.

Results for the Case 1 sensitivity study are shown in Figure ES-5. This figure shows the sensitivity of incremental LCOE to capacity factor, total investment cost, make-up power cost, and $CO_2$ by-product selling price. The base parameter values represent the point in Figure ES-5 where all the sensitivity curves intersect (point 0.0, 0.0). The incremental LCOE ranges from a low of -0.50 ¢/kWh to a high of 7.96 ¢/kWh for the Case 1 sensitivity analysis. The order of sensitivity (most sensitive to least sensitive) of these parameters to incremental LCOE is: $CO_2$

by-product selling price (levelized) > capacity factor > total investment cost > make-up power cost (levelized). For Cases 2 thru 5, the total investment cost becomes more significant than the make-up power cost, but they are approximately equivalent in Case 1.

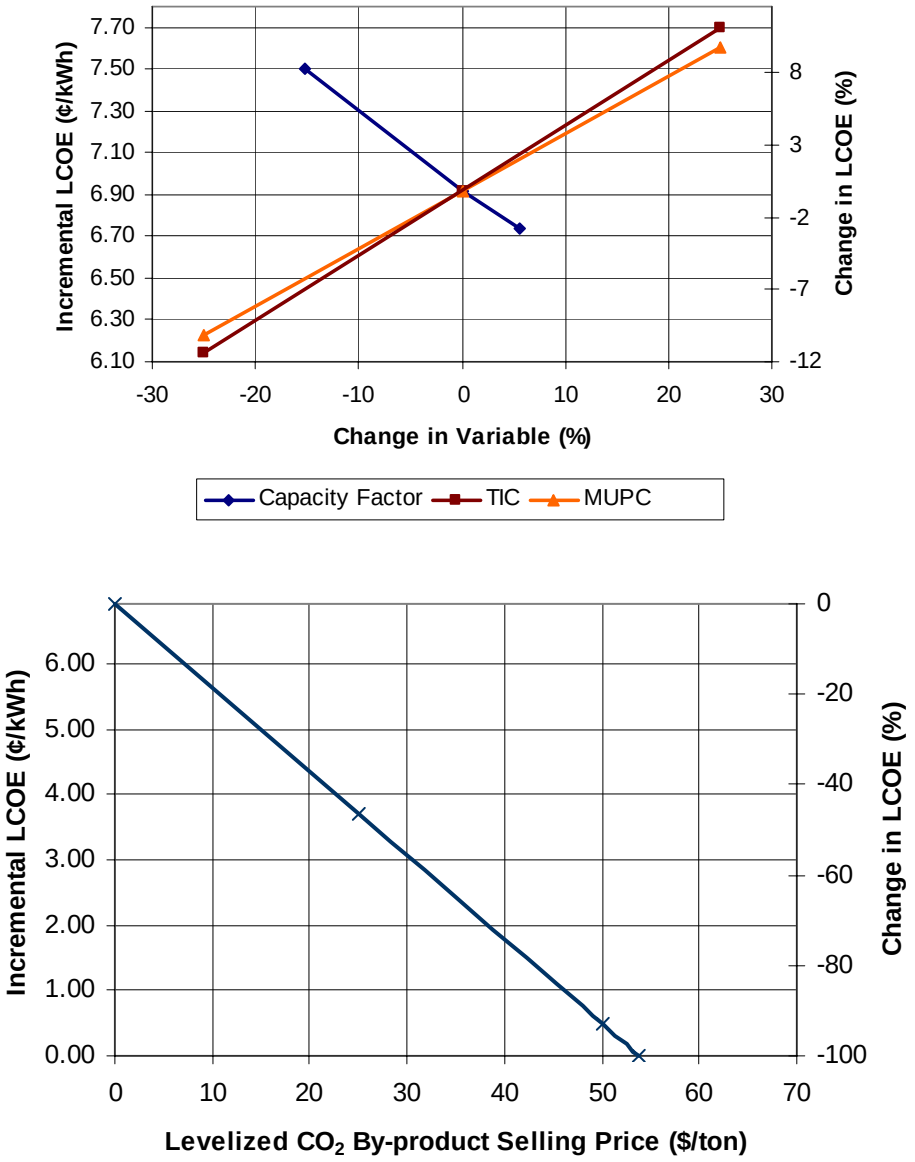


**Figure ES-5: Economic Sensitivity Results (Case 1, 90% $CO_2$ Capture)**

## Reductions in Solvent Regeneration Energy Prove Key to Future Reductions in the Cost of Amine-Based Carbon Capture

Improvements in technical and economic performance resulting from reduction in solvent regeneration energy at the 90% carbon capture level were also evaluated as part of this study and compared to previous work conducted by NETL and Alstom (Bozzuto et al., 2001). The solvent regeneration energy used in this study is based on present day technology, and is 34% less than

in the prior study (2,350 to 1,550 Btu/lbm-$CO_2$). The result is an improvement in plant thermal efficiency of 4.2 percentage points (from 20.3% to 24.5%). Additionally, retrofit specific investment costs ($/kWe) were reduced by 52% and incremental LCOE was reduced by 43%.

Because of this significant improvement in amine system performance (in particular, solvent regeneration energy) in the past several years, technical and economic performance of a near-future solvent regeneration level of 1,200 Btu/lbm-$CO_2$ was compared in a simplified manner to the current technology level of 1,550 Btu/lbm-$CO_2$. The results demonstrated a potential future improvement in plant thermal efficiency loss as low as 9.3 percentage points. Correspondingly, the retrofit specific investment costs ($/kWe) and incremental LCOE were further reduced by 3% and 9% respectively.

Table ES-2 shows the primary impacts of solvent regeneration energy level on plant performance and economics. The results show a significant improvement in plant efficiency relative to the earlier 2001 study (Case 5).

**Table ES- 2: Plant Performance and Economics vs. Solvent Regeneration Energy**

| Case | Base Case | Case 5 (2001) | Case 1 (2006) | Case 1a (Near-future) |
|---|---|---|---|---|
| Solvent Regeneration Energy (Btu/lbm-$CO_2$) | --- | 2,350 | 1,550 | 1,200 |
| Net Plant Efficiency (% HHV) | 35.0 | 20.2 | 24.4 | 25.7 |
| Efficiency Loss (% Points) | --- | 14.8 | 10.6 | 9.3 |
| Incremental LCOE (¢/kWh) | --- | 12.54 | 6.92 | 6.32 |
| $CO_2$ Mitigation Cost ($/tonne) | --- | 134 | 81 | 73 |
| $CO_2$ Mitigation Cost ($/tonne) | --- | 148 | 89 | 81 |
| $CO_2$ Capture Cost ($/tonne) | --- | 76 | 54 | 52 |
| $CO_2$ Capture Cost ($/tonne) | --- | 83 | 59 | 57 |

## Conclusions

No major technical barriers exist for retrofitting AEP's Conesville Unit #5 to capture $CO_2$ with post-combustion amine-based capture systems. Nominally, four acres of new equipment space is needed for the amine-based capture and compression system and can be located in three primary locations on the existing 200-acre power plant site, which accommodates a total of six units (2,080 MWe). Slightly less acreage is needed as the capture level is reduced. However, if all six units on this site were converted to $CO_2$ capture, it may be difficult to accommodate all the new $CO_2$ capture equipment on the existing site and some additional land would probably need to be purchased.

Plant technical performance and the incremental cost of adding carbon capture technology was evaluated at 90%, 70%, 50%, and 30% capture levels with a solvent regeneration energy level of 1,550 Btu/lbm-$CO_2$, which represents the "state of the art" at the time of this study (ca. 2006). Lower levels of $CO_2$ capture can be achieved by simply bypassing some of the flue gas around the $CO_2$ capture system and only processing a fraction of the total flue gas in the amine based capture system, which can then be made smaller. Flue gas bypassing was determined to be the best approach, from a cost and economic standpoint, to obtain lower $CO_2$ recovery levels. Energy requirements and power consumption are high, resulting in significant decreases in overall power plant thermal efficiencies, which range from about 24.5% to 31.6% as the $CO_2$

capture level decreases from 90% to 30% for Cases 1-4 as compared to 35% for the Base Case (all HHV basis). The efficiency decrease is essentially a linear function of $CO_2$ recovery level.

Specific carbon dioxide emissions were reduced from about 908 g/kWh (2 lbm/kWh) for the Base Case to 132-704 g/kWh (0.29-1.55 lbm/kWh) as the $CO_2$ recovery level decreases from 90% to 30%. Case 2 (70% $CO_2$ capture) was found to yield approximately this same amount of $CO_2$ emissions, 362 g/kWh (0.781 lbm/kWh) as typical natural gas combined cycle (NGCC) plant without carbon capture.

Specific investment costs are $540 to $1,319/kWe-new as $CO_2$ capture level increases from 30% to 90%. The specific investment cost is a nearly linear function of $CO_2$ recovery level, although equipment selection and economy of scale effects make this relationship much less linear than efficiency.

All cases studied incur significant increases to the levelized cost of electricity (LCOE) as a result of $CO_2$ capture. The incremental LCOE, as compared to the Base case (air firing without $CO_2$ capture) increases from 2.31 to 6.92 ¢/kWh as $CO_2$ capture level increases from 30% to 90%. Conversely, $CO_2$ mitigation cost increases slightly from $89 to $113/tonne of $CO_2$ avoided as the $CO_2$ capture level decreases from 90% to 30%. The near linear decrease in incremental LCOE with reduced $CO_2$ capture indicates there is no optimum $CO_2$ recovery level.

For the ranges studied, the incremental LCOE is most impacted by the following parameters (in given order): $CO_2$ by-product selling price, $CO_2$ capture level, solvent regeneration energy, capacity factor, investment cost, and make-up power cost.

To examine the impact improvements in amine-based systems, a solvent regeneration energy sensitivity study was completed for the 90% capture level. Reduced solvent regeneration energy was found to have significant impacts on the plant performance and economics. Plant thermal efficiency was calculated to change by about 3.7 percentage points for a change in solvent regeneration energy of 1,000 Btu/lbm-$CO_2$. Similarly, incremental cost of electricity was determined to be sensitive to changes in solvent regeneration energy. The incremental LCOE was calculated to change by about 0.6 ¢/kWh (or about 10% relative to Case 1 at 6.92 ¢/kWh) for a change in solvent regeneration energy of 1,000 Btu/lbm-$CO_2$. Incremental LCOE reductions of about 49% were found, as compared to the original 2001 study.

Overall, the results demonstrate the technical and economical feasibility for retrofitting pulverized coal-fired power plants in the U.S. over a range of carbon capture levels. Research efforts continue to improve upon the technical and economic performance of amine-based carbon capture technology to ensure a potential option for existing U.S. power plants to contribute to reducing carbon emissions in the event the United States decides to embark on a $CO_2$ emissions control program.

# 1 INTRODUCTION

There is growing concern that emissions of $CO_2$ and other greenhouse gases (GHG) to the atmosphere is resulting in climate change with undefined consequences. This has led to a comprehensive program to develop technologies to reduce $CO_2$ emissions from coal-fired power plants. New technologies, such as advanced combustion systems and gasification technologies hold great promise for economically achieving $CO_2$ reductions. However, if the United States decides to embark on a $CO_2$ emissions control program employing these new and cleaner technologies in new plants only, it may not be sufficient. It will also be necessary to reduce emissions from the existing fleet of power plants. This study will build on the results of previous work to help determine better approaches to capturing $CO_2$ from existing coal-fired power plants.

This study significantly increases the information available on the impact of retrofitting $CO_2$ capture to existing PC-fired power plants. This study also provides input to potential electric utility actions concerning GHG emissions mitigation, should the U.S. decide to reduce $CO_2$ emissions. Such information is critical for deciding on the best path to follow for reduction of $CO_2$ emissions, should that become necessary. This study better informs the public as to the issues involved in reducing $CO_2$ emissions, provides regulators with information to assess the impact of potential regulations, and provides data to plant owners/operators concerning $CO_2$ capture technologies. If this is to be done in the most economic manner, it will be necessary to know what level of $CO_2$ recovery is most economical from the point of view of capital cost, cost of electricity (COE), and operability. All this will contribute to achieving necessary controls in the most economically feasible manner.

Although switching to natural gas as a fuel source is an option, a tight supply and rising costs may prevent this from being a universal solution. Also, fuel switching may not provide the desired $CO_2$ emission reductions; and, therefore, some form of $CO_2$ capture may be required. Captured $CO_2$ could be sold for enhanced oil or gas recovery or sequestered. The results of this $CO_2$ capture study will enhance the public's understanding of post-combustion control options and influence decisions and actions by government regulators and power plant operators relative to reducing GHG $CO_2$ emissions from power plants.

The objectives for this study are to evaluate the technical and economic impacts of removing $CO_2$ from a typical existing U.S. coal-fired electric power plant using advanced amine-based post-combustion $CO_2$ capture systems. By investigating various levels of $CO_2$ capture, potential exists for identifying an economically optimum $CO_2$ capture level as well as simply quantifying the effect of $CO_2$ capture level on typical measures of plant performance and economic merit. As a view of the future for amine-based $CO_2$ capture systems, a sensitivity analysis showing the effect of anticipated reductions in solvent regeneration energy was also investigated (Please refer to Section 4 for details). This sensitivity study was done at the 90% $CO_2$ capture level only with solvent regeneration energy values of 1,550 and 1,200 Btu/lbm-$CO_2$ (Cases 1 and 1a respectively). The 1,550 Btu/lbm-$CO_2$ level represents the state of the art at the time of this study (ca. 2006) (IEA, 2004), the 1,200 Btu/lbm-$CO_2$ level represents a near-future value which may be possible with improved solvents, as discussed in the literature. The primary impacts are quantified in terms of plant electrical output reduction, thermal efficiency reduction, $CO_2$

emissions reduction, retrofit investment costs, and the incremental cost of generating electricity resulting from the addition of the $CO_2$ capture systems to the selected study unit.

## 1.1 Background

In a report titled "Engineering Feasibility and Economics of $CO_2$ Capture on an Existing Coal-Fired Power Plant," (Bozzuto et al., 2001), Alstom evaluated the impact of adding facilities to capture >90% of the $CO_2$ from AEP's Conesville, Ohio, Unit #5. During the 1999-2001 time period of the study, Alstom teamed with American Electric Power (AEP), ABB Lummus Global Inc. (ABB), National Energy Technology Laboratory (NETL), and Ohio Coal Development Office (OCDO) and conducted a comprehensive study evaluating the technical and economic feasibility of three alternate $CO_2$ capture technologies applied to an existing U.S. coal-fired electric power plant. The power plant analyzed in this study was Conesville #5, a subcritical, pulverized-coal (PC) fired steam plant operated by AEP of Columbus, Ohio. Unit #5 is one of six coal-fired steam plants located on the Conesville site which has a total generating capacity of ~2,080 MWe. The Unit #5 steam generator is a nominal 450 MW, coal-fired, subcritical pressure, controlled circulation unit. The furnace is a single cell design that employs corner firing with tilting tangential burners. The fuel utilized is bituminous coal from the state of Ohio. The flue gas leaving the steam generator system is cleaned of particulate matter in an electrostatic precipitator (ESP) and of $SO_2$ in a lime-based flue gas desulfurization (FGD) system before being discharged to the atmosphere.

One of the $CO_2$ capture concepts investigated in this earlier study was a post-combustion system which consisted of an amine-based scrubber using monoethanolamine (MEA) as depicted in Figure 1-1. This system was referred to as **Concept A.** In Concept A, coal is burned conventionally in air as schematically depicted below. The flue gases leaving the modified FGD system (a secondary absorber is added to reduce the $SO_2$ concentration, as required by the MEA system) are cooled with a direct contact cooler and ducted to the MEA system where more than 96% of the $CO_2$ is removed, compressed, and liquefied for usage or sequestration. The MEA system uses the Kerr-McGee/ABB Lummus Global's commercial MEA process. The remaining flue gases leaving the new MEA system (consisting of primarily oxygen, nitrogen, water vapor and a relatively small amount of sulfur dioxide and carbon dioxide) are discharged to the atmosphere. The $CO_2$ capture results were compared to a Base Case. The Base Case represents the "business as usual" operation scenario for the power plant without $CO_2$ capture.

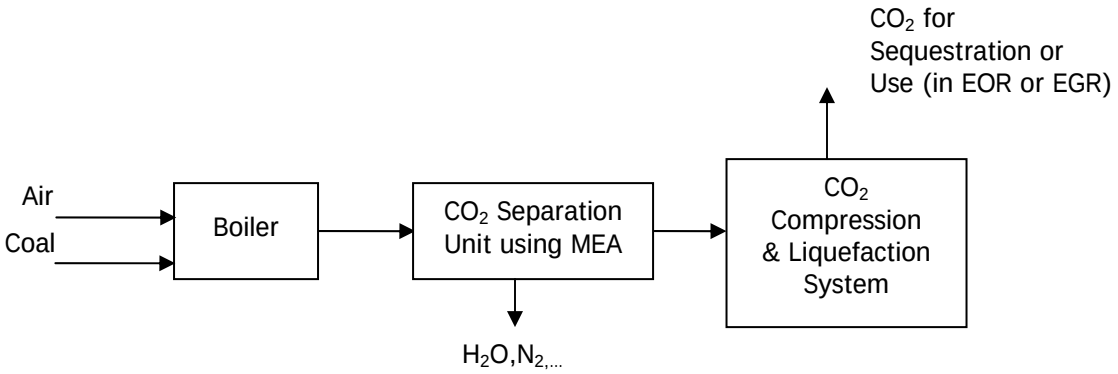


**Figure 1-1: Post-Combustion Amine-Based $CO_2$ Capture Retrofit**

Although boiler performance is identical to the Base Case in Concept A, there is a major impact to the steam cycle system where low-pressure steam is extracted to provide the energy for solvent regeneration. About 79% of the intermediate pressure (IP) turbine exhaust steam is extracted from the IP/LP crossover pipe. This steam is expanded from 200 psia to 65 psia through a new steam turbine/generator where electricity is produced. The exhaust steam leaving the new turbine provides the heat source for solvent regeneration in the reboilers of the $CO_2$ recovery system.

Solvent regeneration for this system requires about 5.46 MJ/Tonne $CO_2$ (2,350 Btu/lbm-$CO_2$). The condensate leaving the reboilers is pumped to the existing deaerator. The remaining 21% of the IP turbine exhaust steam is expanded in the existing low-pressure turbine before being exhausted to the existing condenser. The total electrical output from both the existing and new generators is 331,422 kW. This represents a gross output reduction of 132,056 kW (about 28%) as compared to the Base Case.

Investment costs required for adding the capture system to this existing unit were found to be very high (~$1,602/kWe-new: new refers to the new output level of 331,422 kW). The impact on the cost of electricity was found to be an increase of about 6.2¢/kWh (not including Make-up Power Costs, MUPC).[2]

Based on these results, further study was deemed necessary to find a better approach for capturing $CO_2$ from existing PC-fired power plants.

## 1.2 Current Study

In the current study NETL teamed with Alstom Power Inc., AEP, and ABB as well as with Science Applications International Corporation (SAIC)/Research and Development Solutions (RDS) to conduct a follow-up study. The follow up study again investigated post-combustion capture systems with amine scrubbing as applied to the Conesville #5 unit. The post-combustion $CO_2$ scrubbing system for the current study differs from the previous study in several ways:

- An advanced "state of the art" amine $CO_2$ scrubbing system is used for $CO_2$ removal from the flue gas stream. This advanced system requires significantly less energy for solvent regeneration. Solvent regeneration for this system, designed and selected in 2006, requires about 3.6 MJ/Tonne $CO_2$ ($3.1x10^6$ Btu/Ton $CO_2$) (~34% reduction as compared to the previous study, designed and selected in 2000). Additionally, the reboiler is operated at 3.1 bara (45 psia) as compared to 4.5 bara (65 psia) in the previous study.
- Several $CO_2$ capture levels are investigated in this study (90%, 70%, 50%, and 30%). These are referred to as **Cases 1, 2, 3, and 4** respectively in this study. In the previous study only one $CO_2$ recovery level (96%) was investigated. The costs and economic evaluation of this previous case (Case 5 in the current study) were updated.
- Alstom's steam turbine retrofit group developed a detailed analysis of the modified existing steam turbine. Previously, a more simplified analysis was done for the existing steam turbine.

[2] Costs and economic evaluation were updated as part of the current study. Both the investment cost and incremental cost of electricity doubled as a result of the updated analysis; see Case 5 results.

- In the current study significant quantities of heat rejected from the $CO_2$ capture/ compression system are integrated with the steam/water cycle. Previously, heat integration was not used because the $CO_2$ capture/compression system was located too far away from the steam/water system. The reboiler pressure for the current study was also lowered.
- It is recognized that solvent regeneration energy represents a key variable for amine-based post-combustion $CO_2$ capture systems in terms of the impact it ultimately has on the measures of power plant performance (thermal efficiency) and economic merit (cost of electricity). Knowing that the commercial implementation of these amine-based post-combustion capture systems will be several years in the future, and that research is continually improving the performance of these amines, a sensitivity analysis showing the effect of anticipated reductions in solvent regeneration energy was also investigated in this study. This sensitivity study was done at the 90% capture level only and the solvent regeneration energy levels investigated for this capture level were 1,550 and 1,200 Btu/lbm-$CO_2$. These cases are referred to as **Cases 1 and 1a** respectively in this study.

### 1.2.1 $CO_2$ Capture Level Sensitivity Study

The following list defines the five case included in the capture level sensitivity study presented in this report. The first four cases (Cases 1-4) use an advanced "state of the art" amine scrubbing system designed and cost estimated in 2006. The fifth case (Case 5) uses the Kerr-McGee/ABB Lummus Global's MEA scrubbing system, which was originally designed and cost-estimated in 2000.

- **Case 1:** 90% Capture
- **Case 2:** 70% Capture
- **Case 3:** 50% Capture
- **Case 4:** 30% Capture
- **Case 5:** 96% Capture "Concept A of 2001 study" using Kerr-McGee/ABB Lummus Global's commercial MEA-based process (cost and economic analysis update of previous study only).

To provide a frame of reference, each of the cases is evaluated against a Base Case from the standpoints of performance and impacts on power generation cost. The Base Case represents the "business as usual" operation scenario for the existing plant without $CO_2$ recovery. The Base Case which is used for the current study is identical to the Base Case used in the previous study from a plant performance standpoint. Fuel costs and other operating and maintenance costs for the Base Case have been updated based on AEP's current recommendations. All technical performance and cost results associated with these options are being evaluated in comparative manner.

Furthermore, in the current study, investment costs and economics are updated for "Concept A" from the original study in order to be directly comparable with the current study results. This is referred to as Case 5 in the current study. It should be pointed out that for Case 5 the process

design and equipment selections were developed in 2000 and were not updated for the current study.

### 1.2.2 Solvent Regeneration Energy Sensitivity Study - A Look To The Future:

It is well known that commercial implementation of these amine-based post-combustion capture systems for power plant applications will not occur until several years in the future. This delay is because these systems need to be proven at large scale, $CO_2$ sequestration technology needs to be proven, and policies need to be implemented to make utilization of these systems economic. During this time period, numerous research and developmental efforts are ongoing to further advance post-combustion $CO_2$ capture technologies. These efforts seek to develop technologies that are focused on improving performance and reducing cost with post-combustion $CO_2$ capture.

One of the key parameters with post-combustion $CO_2$ capture systems that is an indicator of relative system performance is regeneration energy requirement (Btu/lbm-$CO_2$). When these post-combustion $CO_2$ capture systems are integrated with power plants, this variable is potentially quite sensitive with respect to the common measures of power plant performance (thermal efficiency) and economic merit (cost of electricity). Hence, as a look to the future, a simple sensitivity analysis for solvent regeneration energy and the impacts on power plant performance (thermal efficiency) and economics (cost of electricity) was carried out. This sensitivity study was done at the 90% capture level only and the solvent regeneration energy levels investigated were 1,550 and 1,200 Btu/lbm-$CO_2$. These cases are referred to as Cases 1 and 1a respectively.

- **Case 1 –** Existing power plant retrofit with an advanced “state of the art” amine system for 90% $CO_2$ capture (1,550 Btu/lbm-$CO_2$ solvent regeneration energy)
- **Case 1a –** Existing power plant retrofit with an advanced “near future” amine system for 90% $CO_2$ capture (1,200 Btu/lbm-$CO_2$ solvent regeneration energy)

The solvent regeneration energy level of 1,550 Btu/lbm-$CO_2$ represents the state of the art at the time of this study (ca. 2006) (IEA, 2004), the 1,200 Btu/lbm-$CO_2$ level represents a future value, which may be possible with improved solvents as discussed in the literature.

Alstom Power Inc. managed and performed the subject study from its U.S. Power Plant Laboratories office in Windsor, Connecticut. Alstom Steam Turbine Retrofit group performed the steam turbine analysis from its offices in Mannheim, Germany. ABB Lummus Global, from its offices in Houston, Texas, participated as a subcontractor. American Electric Power participated by offering their Conesville Unit #5 as the case study, and provided relevant technical and cost data. RDS is the prime contractor reporting to NETL for the project. AEP is one of the largest U.S. utilities and is the largest consumer of Ohio coal, and as such, brings considerable value to the project. Similarly, Alstom Power and ABB Lummus Global are well established as global leaders in the design and manufacture of power generation equipment, petrochemical and $CO_2$ separation technology. Alstom Environmental Business Unit is a world leader in providing equipment and services for power plant environmental control and provided their expertise to this project. The U.S. Department of Energy, National Energy Technology Laboratory through RDS provided consultation and funding.

The motivation for this study was to provide input to potential U.S. electric utility actions to meet Kyoto protocol targets. If the U.S. decides to reduce $CO_2$ emissions consistent with the Kyoto protocol, action would need to be taken to address the fleet of existing power plants. Although fuel switching from coal to gas is one likely scenario, it will not be a sufficient measure and some form of $CO_2$ capture for use or disposal may also be required. The output of this $CO_2$ capture study will enhance the public's understanding of $CO_2$ capture and influence decisions and actions by government, regulators, equipment suppliers, and power plant owners to reduce their greenhouse gas $CO_2$ emissions.

The primary objectives for this study are to evaluate the technical and economic impacts of removing $CO_2$ from this existing U.S. coal-fired electric power plant. By investigating various levels of capture, potential exists for identifying a "sweet spot," as well as simply quantifying the effect of this variable on typical measures of plant performance and economic merit. The impacts are quantified in terms of plant electrical output, thermal efficiency, $CO_2$ emissions, retrofit investment costs, and the incremental cost of generating electricity resulting from the addition of the $CO_2$ capture systems. All technical performance and cost results associated with these options are being evaluated in comparative manner. Technical and economic issues being evaluated include:

- Overall plant thermal efficiency
- Boiler efficiency
- Steam cycle thermal efficiency
- Steam cycle modifications
- Plant $CO_2$ emissions
- Plant $SO_2$ emissions
- Flue Gas Desulfurization system modifications and performance
- Plant systems integration and control
- Retrofit investment cost and cost of electricity (COE)
- Operating and Maintenance (O&M) costs
- $CO_2$ Mitigation Costs

Cost estimates were developed for all the systems required to extract, clean, compress and liquefy the $CO_2$, to a product quality acceptable for pipeline transport. The Dakota Gasification Company's $CO_2$ specification (Dakota 2005) for EOR, given in Table 1-1, was used as one of the bases for the design of the $CO_2$ capture system.

**Table 1-1: Dakota Gasification Project's $CO_2$ Specification for EOR**

| Component | units | Value |
|---|---|---|
| $CO_2$ | vol % | 96 |
| $H_2S$ | vol % | 1 |
| $CH_4$ | vol % | 0.3 |
| $C_2$ + HC's | vol % | 2 |
| CO | vol % | --- |
| $N_2$ | ppm by vol. | 6000 |
| $H_2O$ | ppm by vol. | 2 |
| $O_2$ | ppm by vol. | 100 |
| Mercaptans and other Sulfides | vol % | 0.03 |

The $CO_2$ product could then be available for use in enhanced oil or gas recovery or for sequestration. Additionally, an economic evaluation, showing the impact of $CO_2$ capture on the incremental LCOE, was developed. Included in the economic evaluation was a sensitivity study showing the effects of plant capacity factor, $CO_2$ by-product selling price, investment cost, and make-up power cost, on the incremental LCOE (¢/kWh) and on the mitigation cost for the $CO_2$ ($/ton of mitigated $CO_2$).

This Page Intentionally Left Blank

# 2 STUDY UNIT DESCRIPTION AND BASE CASE PERFORMANCE

This section provides a brief description of the selected Conesville #5 study unit. The study unit is one of six existing coal-fired steam plants located on the site as shown in Figure 2-1. AEP owns and operates these units except for Unit #4, which is jointly owned by AEP, Cinergy, and Dayton Power and Light. The total electric generating capacity on this site is ~2,080 MWe, although two of the older units (Units 1 and 2, shown on the left) have been retired. The steam generated in Unit #5 is utilized in a subcritical steam cycle for electric power generation. The capacity of Conesville Unit #5 is ~430 MWe-net.

**Figure 2-1: Conesville Power Station**

The Base Case for this study is defined as the unmodified existing study unit firing coal at full load without capture of $CO_2$ from the flue gas. This represents the "business as usual" operating scenario and is used as the basis of comparison for the $CO_2$ removal options investigated in this study. The overall performance of the Base Case is presented in Section 2.2.

## 2.1 Study Unit Description

The power plant analyzed in this study is AEP's Conesville Unit #5. This unit is a coal-fired steam plant which generates ~430 MWe-net using a subcritical pressure steam cycle. This plant

has been in commercial operation since 1976. A general arrangement elevation drawing of the study unit steam generator is shown in Figure 2-2.

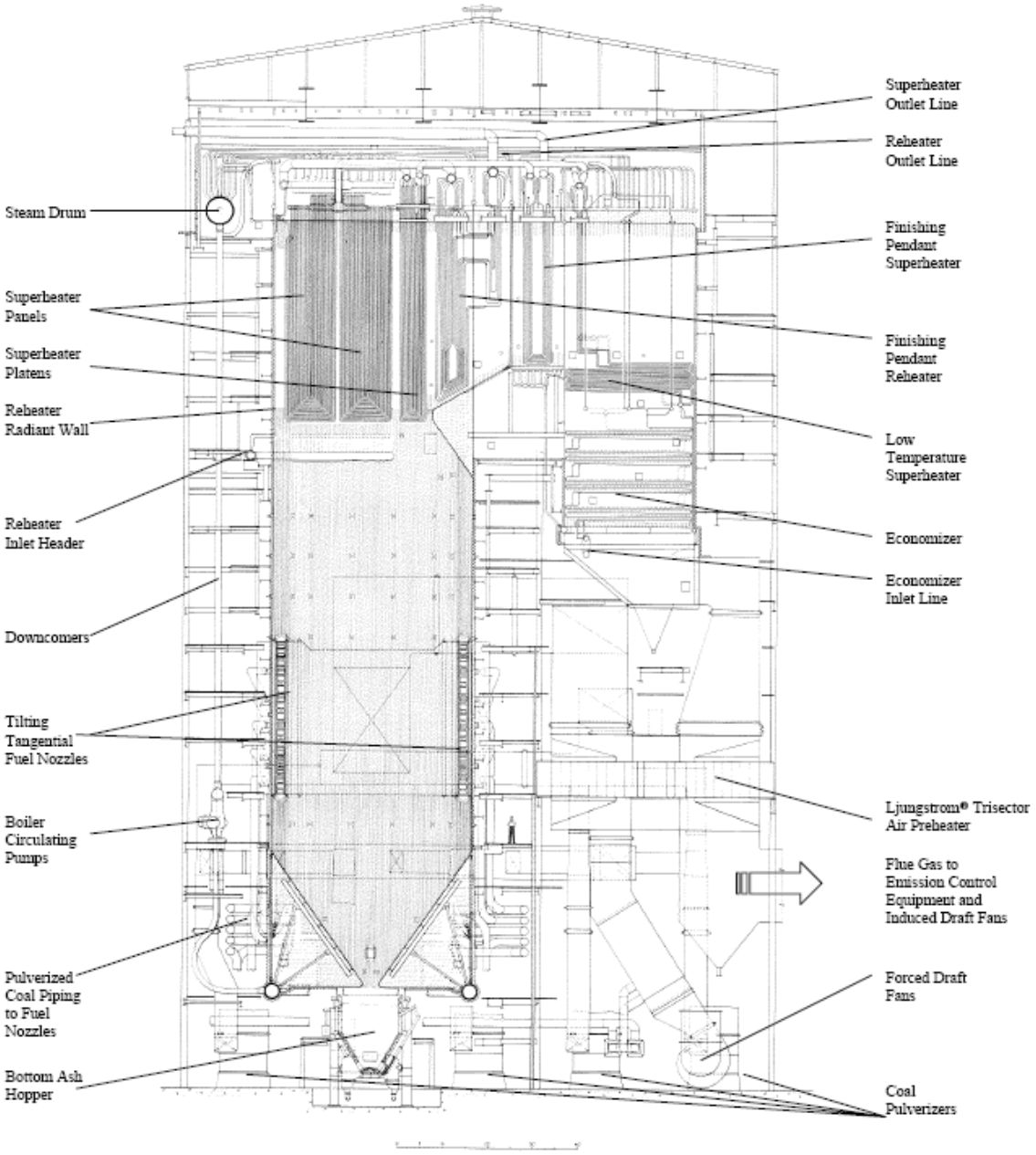


**Figure 2-2: Study Unit Boiler (Existing Conesville Unit #5 Steam Generator)**

The steam generator can be described as a tangentially coal-fired, subcritical pressure, controlled circulation, and radiant reheat wall unit. The furnace is a single cell design utilizing five elevations of tilting tangential coal burners. The furnace is about 15.75 m (51.67 ft) wide,

13.51 m (44.33 ft) deep and 52.33 m (171.67 ft) high. The unit fires mid-western bituminous coal. The coal is supplied to the five burner elevations with five RP-903 coal pulverizers. The unit is configured in a "Conventional Arch" type design and is representative in many ways of a large number of coal-fired units in use throughout the U.S. today. The unit is designed to generate about 391 kg/s (3.1 x $10^6$ lbm/hr) of steam at nominal conditions of 175 bara (2,535 psia) and 538°C (1,000°F) with reheat steam also heated to 538°C (1,000°F). These represent the most common steam cycle operating conditions for the existing U.S. fleet of utility scale power generation systems. Outlet steam temperature control is provided with de-superheating spray and burner tilt.

The superheater is divided into four major sections. Saturated steam leaving the steam drum first cools the roof and walls of the rear pass before supplying the low-temperature superheater section. The low-temperature superheater section is located in the rear pass of the unit and is a horizontal section with the outlet tubes in a vertical orientation adjacent to the finishing superheater section. Steam leaving the low-temperature superheater section first flows through the de-superheater spray stations and then to the radiant superheat division panel section. The division panels are located in the upper furnace directly above the combustion zone of the lower furnace. Steam leaving the division panel section flows to the superheater platen section, which is a more closely spaced vertical section located between the panels and the finishing pendant reheater. Steam leaving the platens flows into the finishing superheater section which is also a pendant section located downstream of the pendant reheater, just before the gas turns downward to enter the low-temperature superheater section in the rear pass of the unit. Steam leaving the finishing superheater is piped to the high-pressure turbine where it is expanded to reheat pressure and then returned to the reheat de-superheating spray station.

The reheater is divided into two sections, a low-temperature radiant wall section followed by a spaced finishing pendent section. Steam is supplied to the reheater radiant wall from the de-superheating spray station, which is fed from the high-pressure turbine exhaust. The reheater radiant wall section is located in the upper furnace and covers the entire front wall and most of the two sidewalls of the upper furnace. The pendant finishing reheat section is located above the arch between the superheat platen and superheat finishing sections. Steam leaving the finishing reheater is returned to the intermediate pressure turbine where it continues its expansion through the intermediate and low-pressure turbines before being exhausted to the condenser.

The gases leaving the low-temperature superheater section are then further cooled in an economizer section. The economizer is comprised of four banks of spiral-finned tubes (0.79 fins/cm or 2 fins/inch), which heats high-pressure boiler feedwater before it is supplied to the steam drum. The feedwater supplying the economizer is supplied from the final extraction feedwater heater.

Flue gas leaving the economizer section then enters the Ljungstrom® trisector regenerative air heater, which is used to heat both the primary and secondary air streams prior to combustion in the lower furnace. Particulate matter is removed from the cooled flue gas leaving the air heater in an electrostatic precipitator (ESP) and sulfur dioxide is removed in a lime-based flue gas de-sulfurization (FGD) system. The induced draft fans are located in between the ESP and the FGD. The cleaned flue gas leaving the FGD system is then exhausted to the atmosphere through the stack, which also serves Unit #6. The induced draft and forced draft fans are controlled to operate the unit in a balanced draft mode with the furnace maintained at a slightly negative pressure (typically -0.5 in wg).

The high-pressure superheated steam leaving the finishing superheater is expanded through the high-pressure steam turbine, reheated in the two-stage reheater and returned to the intermediate pressure turbine. The steam continues its expansion through the low-pressure turbine sections where it expands to condenser pressure. The generator produces about 463 MW of electric power at Maximum Continuous Rating (MCR). The steam cycle utilizes six feedwater heaters (three low-pressure heaters, a deaerator, and two high-pressure heaters) where the feedwater is preheated to about 256°C (493°F) before entering the economizer of the steam generator unit. The boiler feed pump is steam turbine driven with steam provided from the intermediate pressure turbine exhaust and expanded to condenser pressure.

## 2.2 Base Case Performance Analysis

The Base Case can be described as the unmodified existing unit firing coal at full load and without capture of $CO_2$ from the flue gas. This represents the "business as usual" operating scenario and is used as the basis of comparison for the $CO_2$ removal options investigated in this study. The first step in the development of a Base Case was to set up a computer model of the boiler. Using test data from the existing unit, the computer model was then calibrated. The calibrated boiler model was then used for analysis of the Base Case and the $CO_2$ removal cases. The development of the Base Case was done as part of the original study (Bozzuto et al., 2001) and was not repeated for the current study. The Base Case of the original study was used as the Base Case for the current study description of the Base Case development (extracted from the original study report) is provided in this section.

### 2.2.1 Calibration of the Boiler Computer Model

The first step in the calculation of a Base Case was to set up a steady state performance computer model of the Conesville #5 steam generator unit. This involves calculating or obtaining all the geometric information for the unit as required by the proprietary Reheat Boiler Program (RHBP). The RHBP provides an integrated, steady state performance model of the Boiler Island including, in addition to the steam generator unit, pulverizers, air heater, and steam temperature control logic. The RHBP is used to size components and/or predict performance of existing components. In this study, since the boiler island component sizes are known, the RHBP was used exclusively for calculating unit performance.

The next step in the heat transfer analysis of the Base Case was to calibrate the RHBP model of the unit. This involves obtaining test data (with air firing) for the existing unit and "adjusting" the performance model to match the test data. The required test data includes steam temperatures entering and leaving each major heat exchanger section in the unit, steam pressures, coal analysis, flue gas oxygen content, etc. The "adjustments" or "calibration factors" for the model are in the form of "surface effectiveness factors" and "fouling factors" for the various heat exchanger sections throughout the unit. Unfortunately, the test data used for calibration of this model was not totally complete and several assumptions were required in the calibration process. Although all the required data was not available, primarily due to existing instrumentation limitations, a satisfactory calibrated model was obtained.

Using the calibrated boiler model and providing it with new steam side inputs (mass flows, temperatures, and pressures) from the agreed upon MCR steam turbine material and energy

balance, the model was run and performance was calculated for the Base Case. The performance for the overall power plant system is described in Section 2.2.2 with the boiler performance shown in Section 2.2.3 and the steam turbine performance in Section 2.2.4.

### 2.2.2 Overall System Description and Material and Energy Balance (Base Case)

The simplified gas side process flow diagram for the Base Case is shown in Figure 2-3 and the associated material and energy balance for this case is shown in Table 2-1. Overall plant performance is summarized in Table 2-2. This system is described previously in Section 2.2. Boiler efficiency is calculated to be 88.13%. The net plant heat rate is calculated to be 10,285 kJ/kWh (9,749 Btu/kWh) for this case as shown in Table 2-2. Auxiliary power is 29,700 kWe and the net plant output is 433,778 kWe. Carbon dioxide emissions are 109 kg/s (88,156 lbm/hr) or about 907 g/kWh (2.00 lbm/kWh).

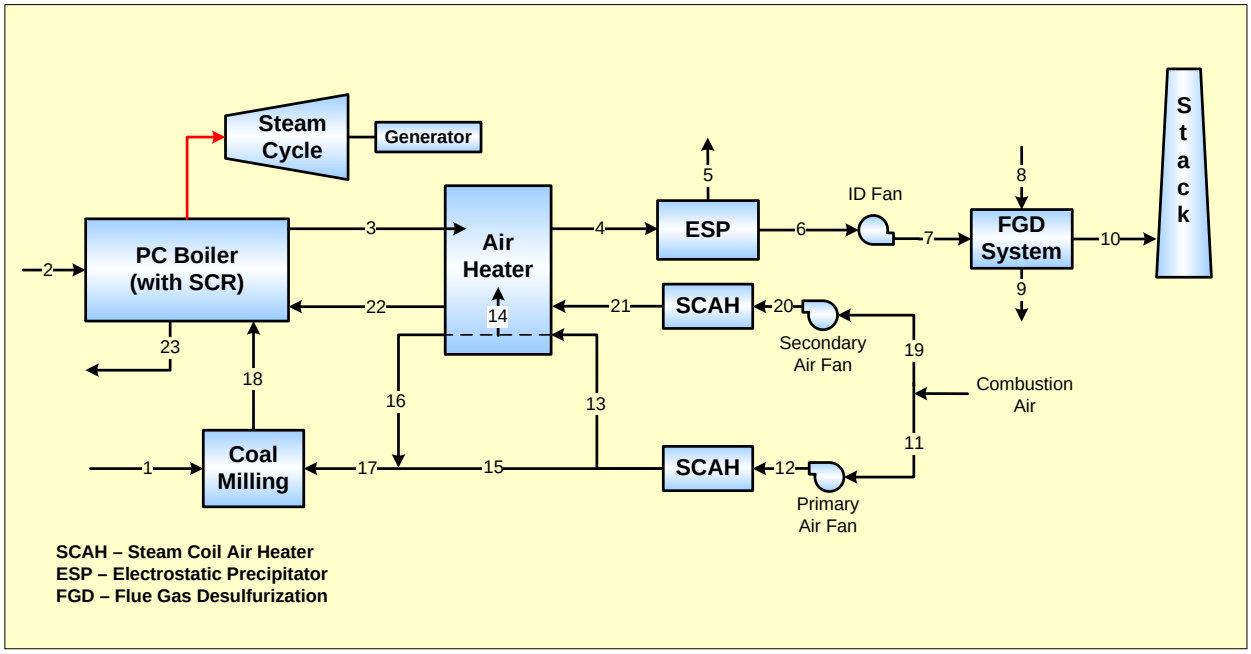


***Material Flow Stream Identification***

| | | | | | |
|---|---|---|---|---|---|
| 1 | Raw Coal to Pulverizers | 9 | FGD System Solids to Disposal | 17 | Mixed Primary Air to Pulverizers |
| 2 | Air Infiltration Stream | 10 | Flue Gas to Stack | 18 | Pulverized Coal and Air to Furnace |
| 3 | Flue Gas from Economizer to Air Heater | 11 | Air to Primary Air Fan | 19 | Secondary Air to Forced Draft Fan |
| 4 | Flue Gas Leaving Air Heater to ESP | 12 | Primary Air to Steam Coil Air Heater | 20 | Secondary Air to Steam Coil Air Heater |
| 5 | Flyash Leaving ESP | 13 | Primary Air to Air Heater | 21 | Secondary Air to Air Heater |
| 6 | Flue Gas Leaving ESP to Induced Draft Fan | 14 | Air Heater Leakage Air Stream | 22 | Heated Secondary Air to Furnace |
| 7 | Flue Gas to Flue Gas Desulfurization System | 15 | Tempering Air to Pulverizers | 23 | Bottom Ash from Furnace |
| 8 | Lime Feed to FGD System | 16 | Hot Primary Air to Pulverizers | | |

**Figure 2-3: Simplified Gas Side Process Flow Diagram (Base Case)**

## Table 2-1: Gas Side Material and Energy Balance (Base Case)

| Constituent | (Units) | 1 | 2 | 3 | 4 | 5 | 6 | 7 | 8 | 9 | 10 | 11 | 12 | 13 |
|---|---|---|---|---|---|---|---|---|---|---|---|---|---|---|
| $O_2$ | (lbm/hr) | 26586 | 42147 | 101097 | 144807 | | 144817 | 144817 | 5335 | | 144578 | 203237 | 203237 | 112918 |
| $N_2$ | " | 4868 | 139626 | 2797385 | 2942220 | | 2942220 | 2942220 | | | 2942220 | 673283 | 673283 | 374075 |
| $H_2O$ | " | 37820 | 2357 | 228849 | 231294 | | 231294 | 231294 | 250709 | 45979 | 436024 | 11365 | 11365 | 6314 |
| $CO_2$ | " | | | 867210 | 867210 | | 867210 | 867210 | | | 866156 | | | |
| $SO_2$ | " | | | 20202 | 20202 | | 20202 | 20202 | | | 1063 | | | |
| $H_2$ | " | 16102 | | | | | | | | | | | | |
| Carbon | " | 236665 | | | | | | | | | | | | |
| Sulfur | " | 10110 | | | | | | | | | | | | |
| Ca | " | | | | | | | | 12452 | | | | | |
| Mg | " | | | | | | | | 584 | | | | | |
| MgO | " | | | | | | | | | 484 | | | | |
| $MgSO_3$ | " | | | | | | | | | 1293 | | | | |
| $MgSO_4$ | " | | | | | | | | | 94 | | | | |
| $CaSO_3$ | " | | | | | | | | | 31579 | | | | |
| $CaSO_4$ | " | | | | | | | | | 2468 | | | | |
| $CaCO_3$ | " | | | | | | | | | 2398 | | | | |
| Ash/Inerts | " | 42313 | | 33851 | 33851 | 33851 | | | 968 | 968 | | | | |
| | | Raw Coal | Leakage Air | Flue gas to AH | Flue gas to ESP | Flyash | Flue gas to ID Fan | Flue gas to FGD | Lime Slurry | FGD Disposal | Flue gas to $CO_2$ Sep | Pri Air to PA Fan | PA from PA Fan | Pri Air to AH |
| Total Gas | (lbm/hr) | | 184130 | 4014743 | 4205743 | | 4205743 | 4205743 | | | 4390042 | 887885 | 887885 | 493308 |
| Total Solids | " | 374455 | | 33851 | 33851 | 33851 | | | 14003 | 42884 | | | | |
| Total Flow | " | 374455 | 184130 | 4048594 | 4239594 | 33851 | 4205743 | 4205743 | 270067 | 88863 | 4390042 | 887885 | 887885 | 493308 |
| | | | | | | | | | | | | | | |
| **Temperature** | (Deg F) | 80 | 80 | 706 | 311 | 311 | 311 | 325 | 80 | 136 | 136 | 80 | 92 | 92 |
| **Pressure** | (Psia) | 14.7 | 14.7 | 14.6 | 14.3 | 14.7 | 14.2 | 15 | 14.7 | 14.7 | 14.7 | 14.7 | 15.6 | 15.6 |
| $h_{sensible}$ | (Btu/lbm) | 0.000 | 0.000 | 161.831 | 57.924 | 57.750 | 57.924 | 61.384 | 0.000 | 14.116 | 14.116 | 0.000 | 2.899 | 2.899 |
| Chemical | ($10^6$ Btu/hr) | 4228.715 | | | | | | | | | | | | |
| Sensible | ($10^6$ Btu/hr) | 0.000 | 0.000 | 655.007 | 245.567 | 1.955 | 243.612 | 258.166 | 0.000 | 3.314 | 63.916 | 0.000 | 2.574 | 1.430 |
| Latent | ($10^6$ Btu/hr) | 0.000 | 2.475 | 240.291 | 242.858 | 0.000 | 242.858 | 242.858 | 0.000 | 0 | 464.020 | 11.933 | 11.933 | 6.630 |
| Total Energy[1] | ($10^6$ Btu/hr) | 4228.715 | 2.475 | 895.298 | 488.425 | 1.955 | 486.470 | 501.024 | 0.000 | 3.314 | 527.936 | 11.933 | 14.507 | 8.060 |

| Constituent | (Units) | 14 | 15 | 16 | 17 | 18 | 19 | 20 | 21 | 22 | 23 | | | |
|---|---|---|---|---|---|---|---|---|---|---|---|---|---|---|
| $O_2$ | (lbm/hr) | 43720 | 90319 | 66680 | 156999 | 183585 | 641283 | 641283 | 641283 | 643801 | | | | |
| $N_2$ | " | 144835 | 299208 | 299208 | 520107 | 524975 | 2124443 | 2124443 | 2124443 | 3122785 | | | | |
| $H_2O$ | " | 2445 | 5051 | 3729 | 8779 | 46599 | 35860 | 35860 | 35860 | 36001 | | | | |
| $CO_2$ | " | | | | | | | | | | | | | |
| $SO_2$ | " | | | | | | | | | | | | | |
| $H_2$ | " | | | | | 16102 | | | | | | | | |
| Carbon | " | | | | | 236655 | | | | | | | | |
| Sulfur | " | | | | | 10110 | | | | | | | | |
| Ca | " | | | | | | | | | | | | | |
| Mg | " | | | | | | | | | | | | | |
| MgO | " | | | | | | | | | | | | | |
| $MgSO_3$ | " | | | | | | | | | | | | | |
| $MgSO_4$ | " | | | | | | | | | | | | | |
| $CaSO_3$ | " | | | | | | | | | | | | | |
| $CaSO_4$ | " | | | | | | | | | | | | | |
| $CaCO_3$ | " | | | | | | | | | | | | | |
| Ash/Inerts | " | | | | | 42313 | | | | | 8463 | | | |
| | | Air Htr Lkg Air | Tempering Air | Hot Pri Air | Mixed Pri Air | Coal-Pri Air Mix | Sec Air to FD | Sec air to SCAH | Sec Air to AH | Hot Sec Air | Bottom Ash | | | |
| Total Gas | (lbm/hr) | 191000 | 394577 | 291308 | 685885 | | 2801587 | 2801587 | 2801587 | 2812587 | | | | |
| Total Solids | " | | | | | | | | | | 8463 | | | |
| Total Flow | " | 191000 | 394577 | 291308 | 685885 | 1060340 | 2801587 | 2801587 | 2801587 | 2812587 | 8463 | | | |
| | | | | | | | | | | | | | | |
| **Temperature** | (Deg F) | 92 | 92 | 666 | 339 | | 80 | 86.4 | 86.4 | 616.1 | 2000 | | | |
| **Pressure** | (Psia) | 15.6 | 15.6 | 15.6 | 15.6 | 15.0 | 14.7 | 15.2 | 15.1 | 14.9 | 14.7 | | | |
| **$h_{sensible}$** | (Btu/lbm) | 2.899 | 2.899 | 145.249 | 63.358 | | 0.000 | 1.549 | 1.549 | 132.582 | 480.000 | | | |
| | | | | | | | | | | | | | | |
| Chemical | ($10^6$ Btu/hr) | | | | | 4228.715 | | | | | | | | |

| | | | | | | | | | | | | | | |
|---|---|---|---|---|---|---|---|---|---|---|---|---|---|---|
| Sensible | ($10^6$ Btu/hr) | 0.554 | 1.144 | 42.312 | 43.456 | | 0.000 | 4.341 | 4.341 | 372.898 | 4.062 | | | |
| Latent | ($10^6$ Btu/hr) | 2.567 | 5.303 | 3.915 | 9.218 | | 37.653 | 37.653 | 37.653 | 37.801 | 0.000 | | | |
| Total Energy[1] | ($10^6$ Btu/hr) | 3.121 | 6.447 | 46.227 | 52.674 | 4281.389 | 37.653 | 41.994 | 41.994 | 410.699 | 4.062 | | | |
| | | | | | | | | | | | | | | |
| Notes: (1) Energy Basis; Chemical Based on Higher Heating Value (HHV); Sensible energy above 80F; Latent based on 1050 Btu/lbm of water vapor | | | | | | | | | | | | | | |

**Table 2-2: Overall Plant Performance Summary (Base Case)**

| | Units | Base Plant |
|---|---|---|
| **Fuel Parameters** | | |
| Coal Heat Input (HHV) | $10^6$ Btu/hr | 4228.7 |
| Natural Gas Heat Input (HHV) | $10^6$ Btu/hr | --- |
| Total Fuel Heat Input (HHV) | $10^6$ Btu/hr | 4228.7 |
| **Steam Cycle Parameters** | | |
| Existing Steam Turbine Generator Output | kW | 463478 |
| $CO_2$ Removal System Turbine Generator Output | kW | 0 |
| Total Turbine Generator Output | kW | 463478 |
| Total Auxiliary Power | kW | 29700 |
| Net Plant Output | kW | 433778 |
| **Overall Plant Performance Parameters** | | |
| Net Plant Efficiency (HHV) | fraction | 0.3501 |
| Net Plant Efficiency (LHV) | fraction | 0.3666 |
| Normalized Efficiency (HHV; Relative to Base Case) | fraction | 1.0000 |
| Net Plant Heat Rate (HHV) | Btu/kWhr | 9749 |
| Net Plant Heat Rate (LHV) | Btu/kWhr | 9309 |
| **Overall Plant $CO_2$ Emissions** | | |
| Carbon Dioxide Emissions | lbm/hr | 866102 |
| Specific Carbon Dioxide Emissions | lbm/kWhr | 1.997 |
| Specific Carbon Dioxide Emissions | kg/kWhr | 0.906 |
| Normalized Specific $CO_2$ Emissions (Relative to Base Case) | fraction | 1.000 |

### 2.2.3 Boiler Analysis Results (Base Case)

The main steam flow for this case and all other cases in this study is 395 kg/s (3,131,619 lbm/hr). The cold reheat flow leaving the high-pressure turbine for this case and all other cases in this study is 348 kg/s (2,765,058 lbm/hr). The hot reheat flow (including de-superheating spray) returning to the intermediate pressure turbine for this case is 359 kg/s (2,850,885 lbm/hr). The overall steam conditions produced by the existing Conesville #5 steam generator unit are shown in Table 2-3 below. To produce these conditions, the superheat circuit requires about 3.6% spray and the reheat circuit requires about 3.1% spray to maintain required steam outlet temperatures. The burner tilts are -10 degrees (the minimum value the customer uses). The boiler was fired with 15% excess air and the resulting boiler efficiency calculated for this case was 88.13% with an air heater exit gas temperature of 155°C (311°F).

**Table 2-3: Boiler/Turbine Steam Flows and Conditions (Base Case)**

| | | SHO | FWI | ECO | RHO | RHI |
|---|---|---|---|---|---|---|
| **Mass Flow** | (lbm/hr) | 3131619 | 3131619 | 3017507 | 2850885 | 2850885 |
| **Pressure** | (psia) | 2535 | 3165 | 3070 | 590.8 | 656.5 |
| **Temperature** | (Deg F) | 1005 | 496.2 | 630 | 1005 | 607.7 |
| **Enthalpy** | (Btu/lbm) | 1459.7 | 483.2 | 652.8 | 1517.1 | 1290.4 |

Notes:
SHO = Superheater Outlet; FWI = Feedwater Inlet; ECO = Economizer Outlet; RHO = Reheater Outlet; RHI = Reheater Inlet

### 2.2.4 Steam Cycle Performance (Base Case)

The selected steam turbine energy and mass flow balance for Conesville #5, which provides the basis for developing the steam turbine performance calculations presented in this study is shown in Figure 2-4.

This turbine heat balance diagram, created by Black & Veatch, is a valves-wide-open, 5% over pressure case utilizing a condenser pressure of 6.35 cm Hga (2.5 in.-Hga) and a steam extraction for air heating of 6.3 kg/s (50,000 lbm/hr). Following general guidelines it is assumed that this diagram reflects the design maximum allowable flow conditions of the existing turbine.

In order to reflect the key performance parameters of the selected unit "as designed," the Black & Veatch heat balance diagram was accurately re-modeled and the following adaptations to real mode operations were made:

- During normal operation no steam is required to feed the steam coil air heaters (6.3 kg/s or 50,000 lb/hr). Therefore, this extraction flow is set to zero.
- Reheat de-superheater spray water flow rate of 11 kg/s (85,827 lb/hr) is to be used as calculated in associated boiler performance computer simulation runs.

Keeping all other conditions constant, namely live steam (LS) pressure and temperature, reheat (RH) temperature and backpressure, the turbine base model reacts to the increase in RH spray (from zero to 11 kg/s or 85,827 lb/hr) and the switch-off of the extraction flow to the air pre-heaters (from 6.3 kg/s to 0 kg/s or from 50,000 lb/hr to 0 lb/hr) with a slight reduction in live steam flow due to the given swallowing capacity of the HP turbine (-0.26% in LS flow). In order to allow comparison with previous investigations the swallowing capacity was slightly re-adjusted to allow the nominal flow of 395 kg/s (3,131,619 lb/hr) at 5% overpressure.

The calculated power output applying this model showed some deficiency when compared to previous studies. This is partly due to the improved detailed modeling of the LP turbine performance, and to other differences between the previous and current models. Again, in order to allow comparison with previous investigations, the generator efficiency was adjusted in a way to allow easy comparison with previous results. Although the resulting generator efficiency may reach higher than typical values, this method allows easy comparison and simple adjustment between the two analyses, by just modifying the generator efficiency.

The final steam cycle for the Base Case is shown schematically in Figure 2-5. Figure 2-6 shows the associated Mollier diagram, which illustrates the process on enthalpy-entropy coordinates. The high-pressure turbine expands about 391 kg/s (3.1 x $10^6$ lbm/hr) of steam at 175 bara (2,535 psia) and 538°C (1,000°F). Reheat steam is returned to the intermediate pressure turbine at 610 psia and 1,000°F. These conditions (temperature and pressure) represent the most common steam cycle operating conditions for existing utility-scale power generation systems in use today in the U.S. The condenser pressure used for the Base Case and all other cases in this study was 6.35 cm Hga (2.5 in. Hga). The steam turbine performance analysis results show the generator produces an output of 463,478 kWe and the steam turbine heat rate is about 8,200 kJ/kWh (7,773 Btu/kWh).

The key parameters describing the reference case are listed below:

| | | |
|---|---|---|
| Live steam pressure | 2,535 / 175 | psia / bara |
| Live steam temperature | 1,000 / 538 | °F / °C |
| Live steam flow | 3,131,619 / 395 | lbm/hr / kg/s |
| Steam for air pre-heating | 0 / 0 | lbm/hr / kg/s |
| RH de-superheating spray | 85,827 / 11 | lbm/hr / kg/s |
| Backpressure | 2.5 / 6.35 | In. Hg abs / cm Hg abs |
| Power output | 463,478 | kW |

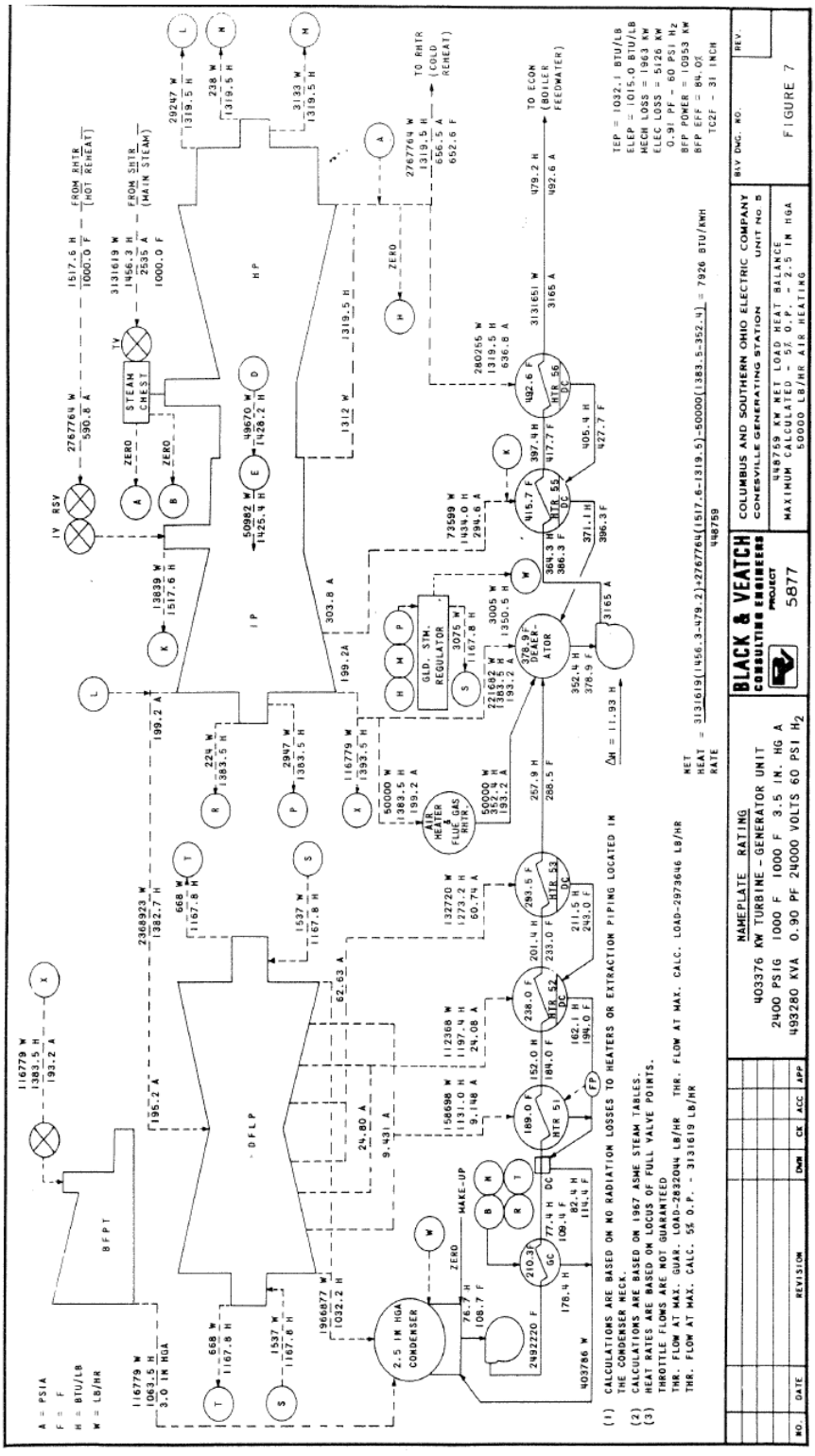


**Figure 2-4: Selected Conesville #5 Turbine Heat Balance (basis for steam turbine modeling)**

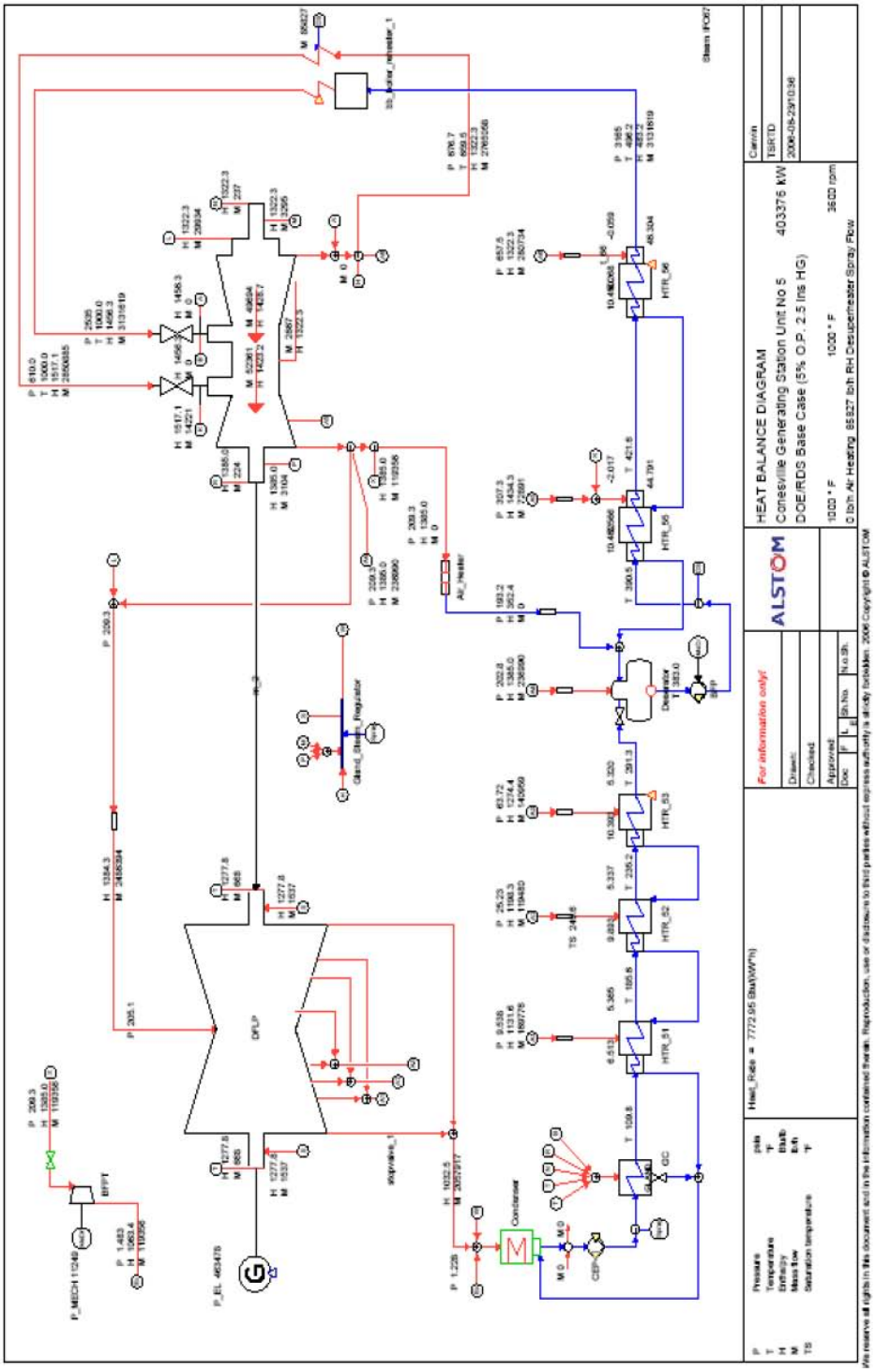


**Figure 2-5: Steam Cycle Diagram and Performance (Base Case)**

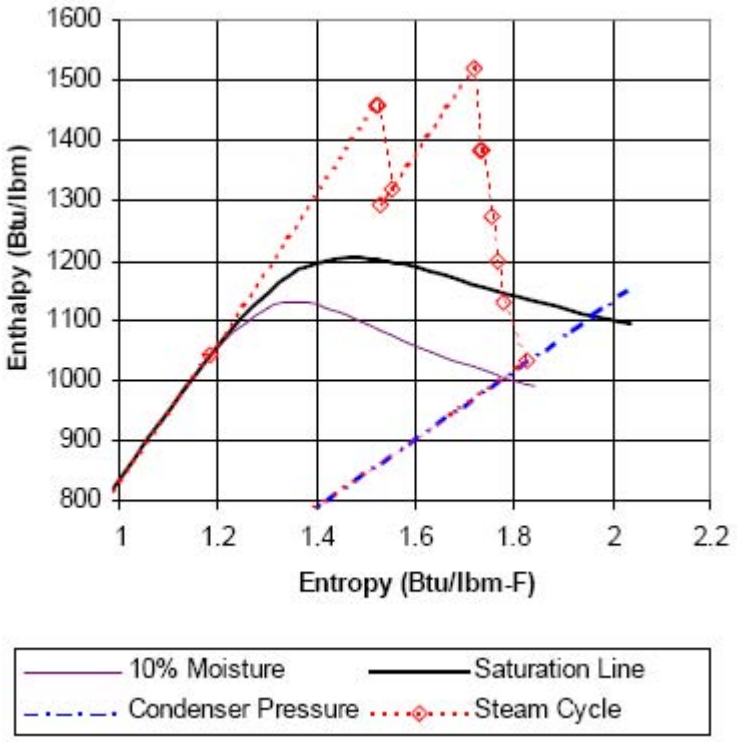


**Figure 2-6: Steam Cycle Mollier Diagram (Base Case)**

### 2.2.5 Flue Gas Desulfurization System Analysis (Base Case)

Figure 2-7 shows the process flow diagram for the existing Flue Gas Desulfurization System. The stream numbers in Figure 2-7 also correspond to stream numbers shown in Figure 2-3. The flue gas leaving the ID fan (Stream 7) is delivered to the absorber, which consists of a tray followed by a two-stage spray system. The incoming gas is saturated as it passes through the scrubbing slurry contained on the tray and through the two spray levels. The active component of the scrubbing slurry is calcium oxide (Stream 8a), which reacts with sulfur dioxide to form calcium bisulfite (Stream 9). The scrubbing slurry is circulated from the reagent feed tank that forms the base of the scrubber to the spray levels. The solids loading in the scrubbing slurry controls the blow down from the reaction tank to by-product disposal. The flue gas passes through chevron-type mist eliminators that remove entrained liquid before exiting the scrubber (Stream 10). The water utilized in spray washing the mist eliminators also serves as make-up (Stream 8b).

Table 2-4 identifies the assumptions that were made in predicting the FGD performance. Table 2-5 shows the gas constituents at the existing absorber inlet and outlet locations. Results show a $CO_2/SO_2$ mole ratio of 63 and an $SO_2$ removal efficiency of 94.9%, corresponding to a value of 104 ppmv at the outlet of the absorber.

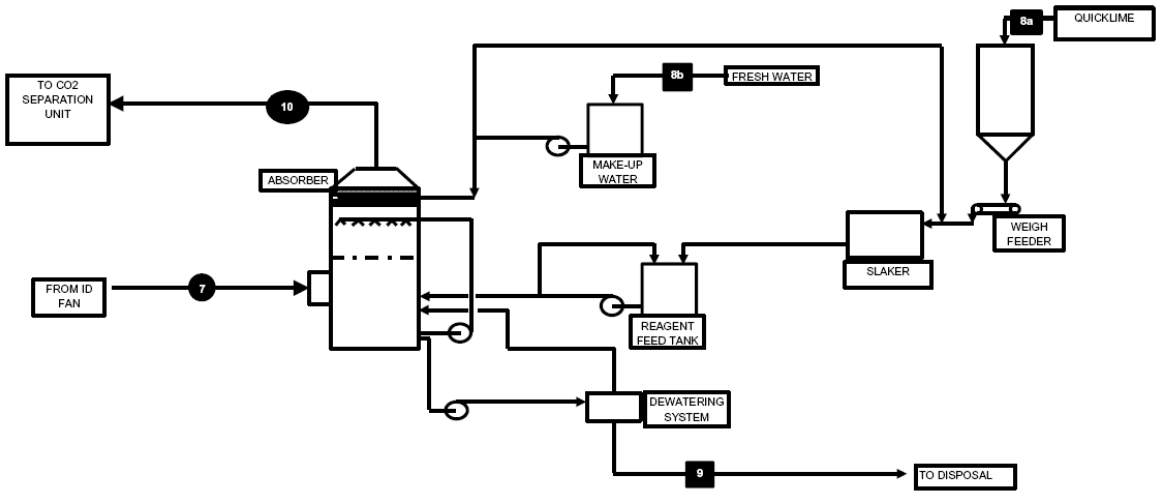


**Figure 2-7: Existing Flue Gas Desulfurization System Process Flow Diagram**

**Table 2-4: FGD System Analysis Assumptions**

| Quantity | Unit | Existing Absorber |
|---|---|---|
| Ca/SO | Mol Ratio | 1.04 |
| Solids | Wt.% | 20 |
| CaO | Wt.% | 90 |
| MgO | Wt.% | 5 |
| Inerts | Wt.% | 5 |
| Bypass Leakage | Wt.% | 2.5 |
| Liquid/Gas (L/G) Ratio | gpm/1000 acfm | 55 |
| $SO_2$ Removal Efficiency | | |
| APC | % | 94.8 |
| Absorber | % | 97.2 |

**Table 2-5: Existing FGD System Performance**

| Base Case | | | | | | |
|---|---|---|---|---|---|---|
| | Existing Absorber Inlet | | | Existing Absorber Outlet | | |
| Species | Mol/hr | Vol.% | Unit | Mol/hr | Vol.% | Unit |
| $O_2$ | 4,469 | 3.14 | Vol.% | 4,461 | 2.91 | Vol.% |
| $N_2$ | 105,018 | 73.74 | Vol.% | 105,018 | 68.44 | Vol.% |
| $H_2O$ | 12,863 | 9.03 | Vol.% | 24,228 | 15.79 | Vol.% |
| $CO_2$ | 19,743 | 13.86 | Vol.% | 19,720 | 12.85 | Vol.% |
| $SO_2$ | 315 | 2,212 | ppmv | 16 | 104 | ppmv |
| | | | | | | |
| $SO_2$ Removal Efficiency, % | | | | | 94.9 | |
| | | | | | | |
| $CO_2/SO_2$ Mole Ratio | | 63 | | | | |

# 3 THE SENSITIVITY OF PLANT PERFORMANCE AND ECONOMICS TO $CO_2$ CAPTURE LEVEL

This section describes the analysis of the impacts of $CO_2$ capture level. All $CO_2$ capture levels were done at the solvent regeneration energy level of 1,550 Btu/lbm-$CO_2$. As mentioned previously, the solvent regeneration energy level of 1,550 Btu/lbm-$CO_2$ represents the state of the art at the time of this study (ca. 2006). By investigating various levels of capture, the potential exists for identifying an economic optimum as well as simply quantifying the effect of this important variable on typical measures of plant performance and economic merit. Four $CO_2$ capture levels (90%, 70%, 50%, and 30%) are investigated in this study. These $CO_2$ capture levels are referred to as Cases 1, 2, 3, and 4, respectively and these four cases represent the primary case studies for this effort. Additionally, Concept A from the 2001 study was updated (costs and economics only) and is referred to as Case 5. This case used an amine system with ~96% $CO_2$ capture and solvent regeneration energy requirements of 2,350 Btu/lbm-$CO_2$.

The primary impacts are quantified in terms of plant electrical output reduction, thermal efficiency, $CO_2$ emissions, retrofit investment costs, and the incremental cost of generating electricity resulting from the addition of the $CO_2$ capture systems.

## 3.1 Study Unit Modifications and Definition of the Amine-Based $CO_2$ Capture Systems

This section provides most of the technical data for the retrofit cases comprising this study. It also discusses the complete retrofit to the power plant in terms of performance, equipment modifications and new equipment required. Each of the five study cases has equipment designed for the removal and recovery of $CO_2$ from the boiler flue gas using an amine scrubbing system. Plant material and energy balances are provided for the new and existing major systems and the equipment added or modified to complete the retrofit. The first subsection discusses the design basis used for the study. The second subsection (Section 3.1.2) discusses the boiler island and performance and equipment modifications. The third and fourth subsections discuss the amine-based $CO_2$ capture and compression systems. The advanced amine systems are discussed first (Section 3.1.3) followed by a review of the amine system from the previous study (Bozzuto et al., 2001) in Section 3.1.5. Finally a discussion of the steam/water cycle modifications and new equipment is presented in Section 3.1.6.

Cases 1-4 (90%, 70%, 50%, and 30% capture, respectively), which use the advanced amine systems, comprise the primary cases of the current study.

A fifth case **(Case 5)** is simply an update of “Concept A” from a previous study (Bozzuto et al., 2001). The update to this case consisted of simply escalating the investment and operating and maintenance costs from 2001 to 2006 $U.S. and re-calculating the economic analysis such that comparisons between the current study results and the previous results could be done on an equivalent basis. The process design and equipment selections for Case 5/Concept A were not updated.

The current study differs from the previous study in several ways, as listed below:

- First, an advanced amine $CO_2$ scrubbing system is used for $CO_2$ removal from the flue gas stream. This advanced system requires significantly less energy for solvent regeneration. Solvent regeneration for this system requires about 3.6 MJ/Tonne $CO_2$ ($3.1x10^6$ Btu/Ton $CO_2$) (~34% reduction). Additionally, the reboiler was operated at 3.1 bara (45 psia) as opposed to 4.5 bara (65 psia) in the previous study.
- Second, several $CO_2$ capture levels are investigated in this study (90%, 70%, 50%, and 30%). These are referred to as Cases 1, 2, 3, and 4 respectively in this study. Previously only one $CO_2$ capture level (96%) was investigated.
- Third, the current study differs from the previous study in that Alstom's steam turbine retrofit group developed a detailed analysis of the modified existing steam turbine. Previously, a more simplified analysis was used for the existing steam turbine.
- Another difference is that in the current study, significant quantities of heat rejected from the $CO_2$ capture/compression system are integrated with the steam/water cycle. Previously, heat integration was not used because the new $CO_2$ capture/compression system was located too far away (>1,500 ft) from the existing steam/water system.

### 3.1.1 Design Basis for $CO_2$ Capture Systems Retrofit Equipment and Performance Calculations (Cases 1-5)

This section describes many of the assumptions and data used for design of the equipment and in the calculation of process performance.

#### 3.1.1.1 Site Data

Listed below is the summary of the site data used for equipment design:

- Plant is located in Conesville, Ohio, elevation 227 m (744 ft).
- Atmospheric pressure is 76 cm Hga (29.92 in. Hg).
- Dry bulb maximum temperature is 33°C (92°F) and minimum is -1°F.
- Wet bulb temperature for cooling tower design is 24°C (75°F).
- Average cooling tower water temperature is 27°C (80°F).
- Electric power is available from the existing facilities. Auxiliary power is provided through auxiliary transformers at 4,160-volt bus and is reduced down to 480 volts.
- 316L stainless steel is the preferred material of construction where the flue gas cooling systems contain halides and sulfur oxides.
- Pressure of product $CO_2$ is 139 bara (2,015 psia).
- For all plant performance calculations and material and energy balances the atmospheric conditions to be assumed are the standard conditions of 27°C /80°F, 1.014 bara/14.7 psia, 60% relative humidity).
- Condenser pressure used for all turbine heat balances is 2.5 in. Hga.

#### 3.1.1.2 Fuel Analyses

Table 3-1 shows the coal analysis used for this study and Table 3-2 shows the natural gas analysis. Natural gas was used for desiccant regeneration in the $CO_2$ drying package.

**Table 3-1: Coal Analysis**

| **Proximate Analysis, Wt.%** | |
|---|---|
| Moisture | 10.1 |
| Ash | 11.3 |
| Volatile Matter | 32.7 |
| Fixed Carbon | 45.9 |
| **Total** | **100.0** |
| | |
| **Ultimate Analysis, Wt.%** | |
| Moisture | 10.1 |
| Ash | 11.3 |
| H | 4.3 |
| C | 63.2 |
| S | 2.7 |
| N | 1.3 |
| O | 7.1 |
| **Total** | **100.0** |
| | |
| **Higher Heating Value** | |
| Btu/lbm | 11,293 |
| kJ/kg | 26,266 |

**Table 3-2: Natural Gas Analysis**

| **Component** | | **Vol.%** |
|---|---|---|
| Methane | | 93.9 |
| Ethane | | 3.2 |
| Propane | | 0.7 |
| n-butane | | 0.4 |
| Carbon Dioxide | | 1.0 |
| Nitrogen | | 0.8 |
| **Total** | | **100.0** |
| | **LHV** | **HHV** |
| kJ/kg | 47805 | 53015 |
| kJ/scm | 35 | 39 |
| Btu/lbm | 20552 | 22792 |
| Btu/scf | 939 | 1040 |

Battery Limit Definition

Figure 3-1 shows a plot plan view of the existing Conesville Unit #5 with the major new equipment locations identified for Cases 1-4.

The new secondary $SO_2$ absorber for the modified FGD system is located just north and adjacent to the existing lime preparation and $SO_2$ scrubber equipment building in order to minimize the length of new ductwork and the associated draft losses.

The new amine plant absorbers are located ~30 m (100 feet) west of the Unit #5 stack to minimize the length of ductwork and the associated draft losses. The amine regenerators (Strippers) are located ~61 m (200 feet) south of Unit #5's steam turbine to minimize the length of low pressure steam piping and the associated pressure drops. The $CO_2$ compression, dehydration, and liquefaction facilities are located ~150 m (500 feet) south of the $CO_2$ strippers to minimize pressure drop in the connecting duct.

The $CO_2$ recovery and liquefaction equipment receives cooling water from the existing plant steam/water cycle (the existing plant cooling system). The availability of plant cooling water from the existing plant is the result of diverting steam that would have been used to generate power to the amine regeneration plant. This steam would have been condensed by water from the existing plant cooling tower but is now condensed by the amine regenerators.

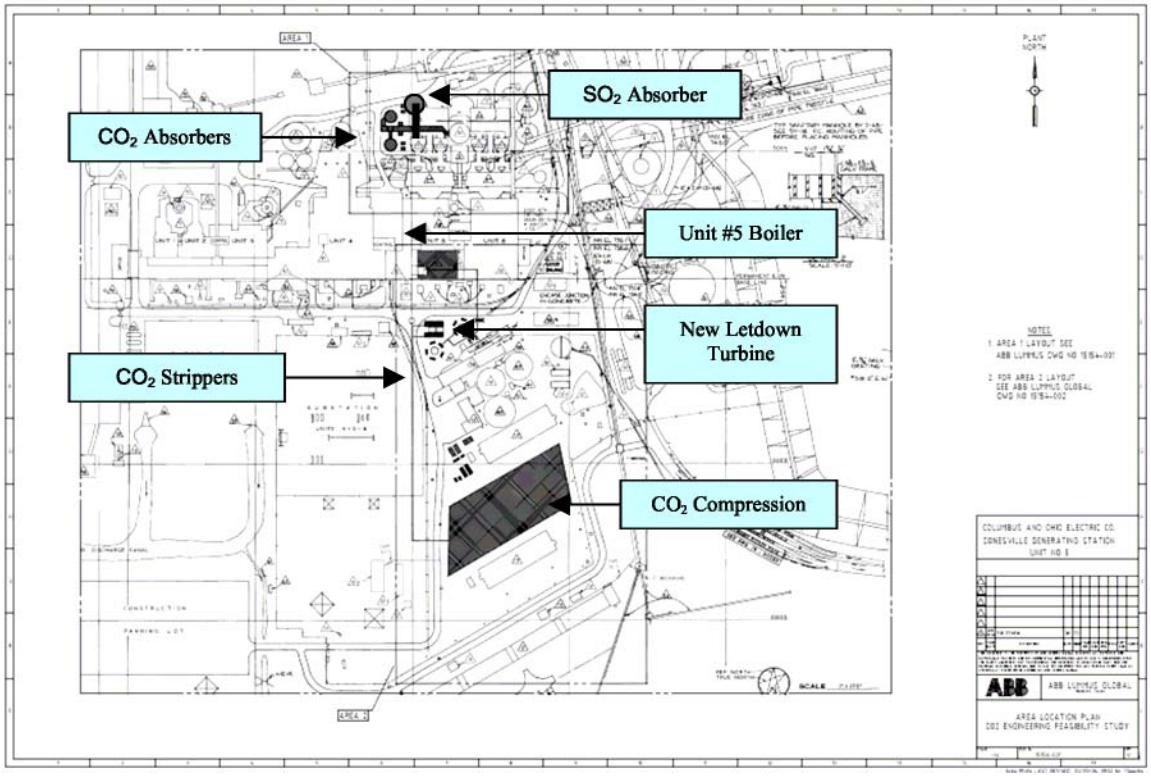


**Figure 3-1: AEP Conesville, Ohio, Electric Power Generation Station Site and New Equipment Locations (Cases 1-4)**

The $CO_2$ recovery and liquefaction sections have their own control room and MCC. In addition to the flue gas, which serves as the feed to the unit, it must also receive the required utilities and chemicals. Soda ash - if available from existing facilities - can be used to maintain levels in this facility's day tanks. Otherwise it can be off-loaded from trucks into the day tanks. Diatomaceous earth used in the amine filtration equipment will be off-loaded on skids. The spent diatomaceous earth leaves the plant in drums. Amine reclaimer effluent will be collected in a tank truck parked at one end of the unit. Potable water for eye washes and cooling tower make-up water for hose down will be routed along side the $CO_2$ gas duct. Corrosion inhibitor, to provide oxygen resistance to the amine, will be provided directly from drums into an injection package.

The $CO_2$ capture and liquefaction sections are based on the following flue gas analysis, which is taken after the modified Flue Gas Desulfurization system (FGD). See Table 3-3.

**Table 3-3: Flue Gas Analysis Entering Amine System (Cases 1-5)**

| Component | Mole % |
|---|---|
| $O_2$ | 2.94 |
| $N_2$ | 68.31 |
| $H_2O$ | 15.95 |
| $CO_2$ | 12.80 |
| $SO_2$ | <10 ppmv |
| MW | 28.59 |
| T (°F) | 136 |
| P(psia) | 14.7 |

### 3.1.1.3 $CO_2$ Product Specification

The $CO_2$ product specification is shown in Table 3-4 below. This specification was taken from the Dakota Gasification Company product specification for EOR (Dakota, 2005). A $CO_2$ product pressure of 139 bara (2,015 psia) is used in all the cases that follow.

**Table 3-4: $CO_2$ Product Specification**

| Component | Mole % |
|---|---|
| $O_2$ | 0.0100 |
| $N_2$ | 0.6000 |
| $H_2O$ | 0.0002 |
| $CO_2$ | 96.000 |
| $H_2S$ | 0.0001 |
| Mercaptans | 0.0300 |
| $CH_4$ | 0.3000 |
| $C_2$ + Hydrocarbons | 2.0000 |

#### 3.1.1.4 $CO_2$ Recovery Process Simulation Parameters

For Cases 1-4, which all use the advanced "state of the art" amine process, a commercial simulator called ProTreat® Version 3.3 was used to simulate the MEA process. Hysys® Version 2004.2 was used to simulate $CO_2$ compression and liquefaction systems.

The material balances for Case 5/Concept A were run on two process simulators: Hysim and Amsim. Amsim was used for the Absorption/Stripping systems while Hysim was used for the conventional systems as follows:

- Flue Gas feed Hysim
- Absorber and Stripper Amsim
- Compression liquefaction Hysim

The key process parameters used in the simulations are listed in Table 3-5 as well as data from a built and operating plant.

AES Corporation owns and operates a 200 STPD food grade $CO_2$ production plant in Oklahoma. This plant was designed and built by ABB Lummus Global as a part of the larger power station complex using coal-fired boilers. This plant was started up in 1990 and has been operating satisfactorily with lower than designed MEA losses. The key process parameters from the present designs for Cases 1-4, which use the advanced amine system, and Case 5/Concept A, which uses the Kerr/McGee ABB Lummus amine system, are compared with those from the built and operating AES plant (Barchas and Davis, 1992) in Table 3-5.

**Table 3-5: Key Parameters for Process Simulation**

| Process Parameter | AEP Design Cases 1-4 | AEP Design Case 5 | AES Design |
|---|---|---|---|
| Plant Capacity, Ton/Day | 9,350-3,120 | 9,888 | 200 |
| $CO_2$ in Feed, mol % | 12.8 | 13.9 | 14.7 |
| $O_2$ in Feed, mol % | 2.9 | 3.2 | 3.4 |
| $SO_2$ in Feed, ppmv | 10 (Max) | 10 (Max) | 10 (Max) |
| Solvent | MEA | MEA | MEA |
| Solvent Conc. Wt% | 30 | 20 | 15 (Actual 17-18%Wt) |
| Lean Loading, mol $CO_2$/mol amine | 0.19 | 0.21 | 0.10 |
| Rich Loading, mol $CO_2$/mol amine | 0.49 | 0.44 | 0.41 |
| Stripper Feed Temp, °F | 205 | 210 | 194 |
| Stripper Bottom Temp, °F | 247 | 250 | 245 |
| Feed Temp To Absorber, °F | 115 | 105 | 108 |
| $CO_2$ Recovery, % | 30-90 | 96 | 90 (Actual 96-97%) |
| Absorber Pressure Drop, psi | 1 | 1 | 1.4 |
| Stripper Pressure Drop, psi | 0.7 | 0.6 | 4.35 |
| Rich/Lean Exchanger Approach, °F | 40 | 10 | 50 |
| $CO_2$ Compressor 1st /Stage Temp, °F | 125 | 105 | 115 |
| Liquid $CO_2$ Temp, °F | 82 | 82 | -13 |
| Steam Use, lbs Steam/ lb $CO_2$ captured | 1.67 | 2.6 | 3.45 |
| Liquid $CO_2$ Pressure, psia | 2,015 | 2,015 | 247 |

### 3.1.1.5 Chemicals

This section provides data for the chemicals available on site and used by the $CO_2$ Recovery Unit. Conditions for liquid chemicals are specified at grade level.

**Table 3-6: Soda Ash ($Na_2CO_3$) Requirements**

| Property | Pressure at B.L. Psia | Temperature °F |
|---|---|---|
| Normal | 30 | Ambient |
| Mechanical Design | 65 | 125 |

- Available for reclaiming MEA
- The import and dilution facilities will be used to keep a day tank in the process area at desirable levels

### 3.1.1.6 Utilities

De-superheated steam at 3.2 bara (47 psia) is supplied to the amine regeneration system from a new low-pressure (LP) let down turbine that will operate in parallel with the existing LP turbine.

Steam for the new LP let down turbine comes from the existing intermediate pressure (IP) turbine outlet.

**Steam:**

Reboiler Source: Low-pressure steam from the new LP let down turbine outlet:
The steam leaving the let down turbine is used in the amine regeneration system reboilers for process heating.

**Table 3-7: Process Steam Conditions (reboilers)**

| Property | Pressure at B.L. Psia | Temperature °F |
|---|---|---|
| Minimum (for process design) | 43 | 272 |
| Normal | 45 | 274 |
| Maximum | 50 | 281 |
| Mechanical Design | 300 | 500 |

Reclaimer Source: Low-pressure steam from the existing IP turbine outlet:
The steam leaving the IP turbine is used in the amine system reclaimer for amine reclamation.

**Table 3-8: Process Steam Conditions (reclaimer)**

| Property | Pressure at B.L. Psia | Temperature °F |
|---|---|---|
| Minimum (for process design) | 85 | 316 |
| Normal | 90 | 320 |
| Maximum | 95 | 324 |
| Mechanical Design | 300 | 500 |

**Water:**
Cooling Water:
Source: Existing Cooling Towers

**Table 3-9: Cooling Water Conditions**

| CW Supply | Pressure at B.L. (Psia) | Temperature °F |
|---|---|---|
| Minimum | 60 | 70 |
| Normal | 65 | 80 |
| Maximum | 90 | 95 |
| Mechanical Design | 150 | 150 |

| CW Return | Pressure at B.L. (Psia) | Temperature °F |
|---|---|---|
| Minimum | | 100 |
| Normal | 45 | 110 |
| Maximum | | 135 |
| Mechanical Design | 150 | 175 |

**Table 3-10: Surface Condensate (for amine make-up)**

| Property | Pressure at B.L. (Psia) | Temperature °F |
|---|---|---|
| Normal | 135 | 110 |
| Mechanical Design | 175 | 200 |

Raw Water (Fresh Water):
Fresh water is distributed for general use at hose stations. The source of this water is the clarifier, which is used for cooling tower make-up. The capacity of the existing clarifier is sufficient for make up. Its quality is as follows:

**Table 3-11: Raw Water (fresh water)**

| Components | Unit | Specifications |
|---|---|---|
| Si | ppm | 22 |
| Iron (as Fe) | ppm | 0.18 |
| Copper (as Cu) | ppm | 0.05 |
| Suspended Solids | ppm | 15 |
| Chlorine | ppm | 100-180 |
| Alkalinity | ppm | 100 |
| Na | ppm | 100 |

Potable Water:
Potable water comes from public network for safety showers and eye washes and requirements are defined below:

**Table 3-12: Potable Water**

| Property | Pressure at B.L. (Psia) | Temperature °F |
|---|---|---|
| Normal | 115 | Ambient |
| Mechanical Design | 150 | 150 |

**Air:**
Plant air and instrument air requirements are defined below:

**Table 3-13: Plant Air**

| Property | Pressure at B.L. Psia | Temperature °F |
|---|---|---|
| Normal | 130 | 100 |
| Mechanical Design | 190 | 150 |

Dew point (at normal supply pressure - 40°C)

**Table 3-14: Instrument Air**

| Property | Pressure at B.L. (Psia) | Temperature °F |
|---|---|---|
| Normal | 130 | 100 |
| Mechanical Design | 190 | 150 |

Dew point (at normal supply pressure - 40°C)
Dust, oil and grease free

**Fuel Gas:**
Fuel gas (natural gas) requirements are defined below:

**Table 3-15: LP Fuel Gas (natural gas)**

| Property | Pressure at OSBL (Psig) | Temperature °F |
|---|---|---|
| Normal | 50 | Ambient |
| Mechanical Design | 100 | 150 |

**Power Supply:**
All of the required power (100%) for the $CO_2$ Recovery Unit will be provided by AEP either from the local supply or from the Ohio Grid.
Source: Conesville auxiliary power system at 4,160 volts or stepped down to 480 volts.

**Table 3-16: Power Supply Requirements**

| Service | Voltage | Phase |
|---|---|---|
| Auxiliary plant power system | 4160 | 3-phase |
| Large Motors | 4160 | 3-phase |
| Small Motors | 480 | 3-phase |
| Instruments, Lighting, etc. | 480 / 230 | 3/1-phase |

### 3.1.2 Boiler Island Modifications and Performance (Cases 1-5)

This section describes boiler island modifications and performance for the study unit. The modifications to the boiler island and the boiler island performance shown in this section are applicable to all five cases of this study.

#### 3.1.2.1 Boiler Modifications

For this project the boiler scope is defined as everything on the gas side upstream of the FGD System. Therefore, it includes equipment such as the Conesville #5 steam generator, pulverizers, fans, ductwork, electrostatic precipitator (ESP), air heater, coal and ash handling systems, etc. Purposely not included in the boiler scope definition is the FGD system. The FGD system modifications are shown separately in Section 3.1.2.2.

For all the $CO_2$ capture options investigated in this study (Cases 1-5), Boiler Scope is not modified from the Base Case configuration.

#### 3.1.2.2 Flue Gas Desulfurization System Modifications and Performance

The FGD system for all five cases is modified with the addition of a secondary absorber to reduce the $SO_2$ content to 10 ppmv or less as required by the amine system downstream.

**Modified FGD System Process Description and Process Flow Diagram**

The principle of operation of the FGD system is briefly described previously in Section 2.2.5 and is not repeated here. In the five capture cases, however, the entire flue gas stream leaving the existing FGD system absorber is supplied to the new secondary absorber and the flue gas stream leaving the secondary absorber provides the feed stream source for the new amine $CO_2$ absorption systems. Additional piping and ductwork is required as shown in Figure 3-2, which provides a simplified process flow diagram for the modified FGD system.

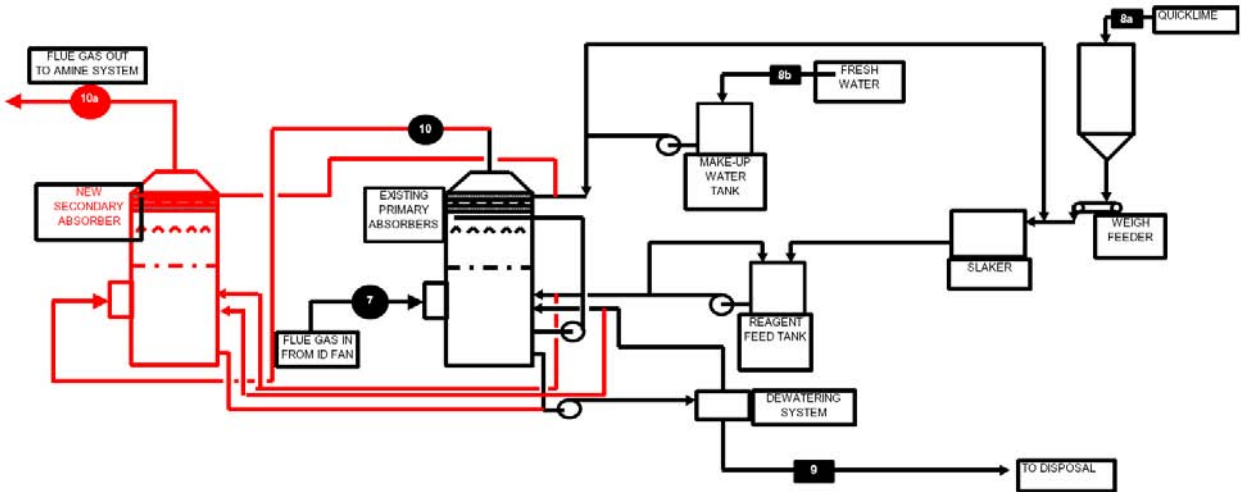


**Figure 3-2: Modified FGD System Simplified Process Flow Diagram (Cases 1-5)**

## Modified FGD System Performance

Table 3-17 identifies the assumptions that were made in predicting the modified FGD system performance.

**Table 3-17: Modified FGD System Assumptions (Cases 1-5)**

| Quantity | Unit | Existing Absorber | Secondary Absorber |
|---|---|---|---|
| Ca/S | Mol Ratio | 1.04 | 1.04 |
| Solids | Wt.% | 20 | 20 |
| CaO | Wt.% | 90 | 90 |
| MgO | Wt.% | 5 | 5 |
| Inerts | Wt.% | 5 | 5 |
| By-pass Leakage | Wt.% | 2.5 | 0 |
| Liquid/Gas (L/G) Ratio | gpm/1000 acfm | 75 | 45 |
| $SO_2$ Removal Efficiency | | | |
| APC | % | 94.8 | 93.0 |
| Absorber | % | 97.2 | 93.0 |

Table 3-18 indicates the modified FGD system performance by identifying gas constituents at the existing absorber inlet and secondary absorber outlet. Results show a $CO_2/SO_2$ mole ratio of 63 and an overall $SO_2$ removal efficiency of 99.7%, corresponding to a value of 6.5 ppmv $SO_2$ at the outlet of the secondary absorbers.

**Table 3-18: Modified FGD System Performance (Cases 1-5)**

| Constituent | Existing Absorber Inlet | | | Secondary Absorber Outlet | | |
|---|---|---|---|---|---|---|
| | lbm/hr | Mol/hr | Vol % | lbm/hr | Mol/hr | Vol % |
| $O_2$ | 144817 | 4526 | 3.18 | 144566 | 4518 | 2.94 |
| $N_2$ | 2942220 | 105019 | 73.75 | 2942220 | 105019 | 68.31 |
| $H_2O$ | 231294 | 12838 | 9.02 | 441924 | 24530 | 15.95 |
| $CO_2$ | 867210 | 19705 | 13.84 | 866102 | 19680 | 12.80 |
| $SO_2$ | 20202 | 315 | 0.22 | 87 | 1 | 0.00 |
| $SO_2$, ppmv | | | 2215 | | | 8.8 |
| Total | 4205743 | 142403 | 100 | 4394900 | 153748 | 100 |
| $SO_2$ Removal Efficiency, % | | 94.9 | | | 99.6 | |
| | | | | | | |
| $CO_2/SO_2$, Mole Ratio | | | 62 | | | |

## Modified FGD System Equipment Layout

Figure 3-3 shows the location of the new secondary $SO_2$ absorber. The new secondary absorber is a single vessel, which is 12.8 m (42 ft) in diameter, and is located just to the north and adjacent to the existing Conesville Unit #5 lime preparation and scrubber equipment building (i.e. label

#53 shown in green in the lower right part of Figure 3-3). This location minimizes the length of ductwork running from the existing FGD system to the new secondary $SO_2$ absorber and the ductwork length from the secondary $SO_2$ absorber to the new $CO_2$ absorbers. The blue lines indicate alterations, which must be made to the access roads located in this area.

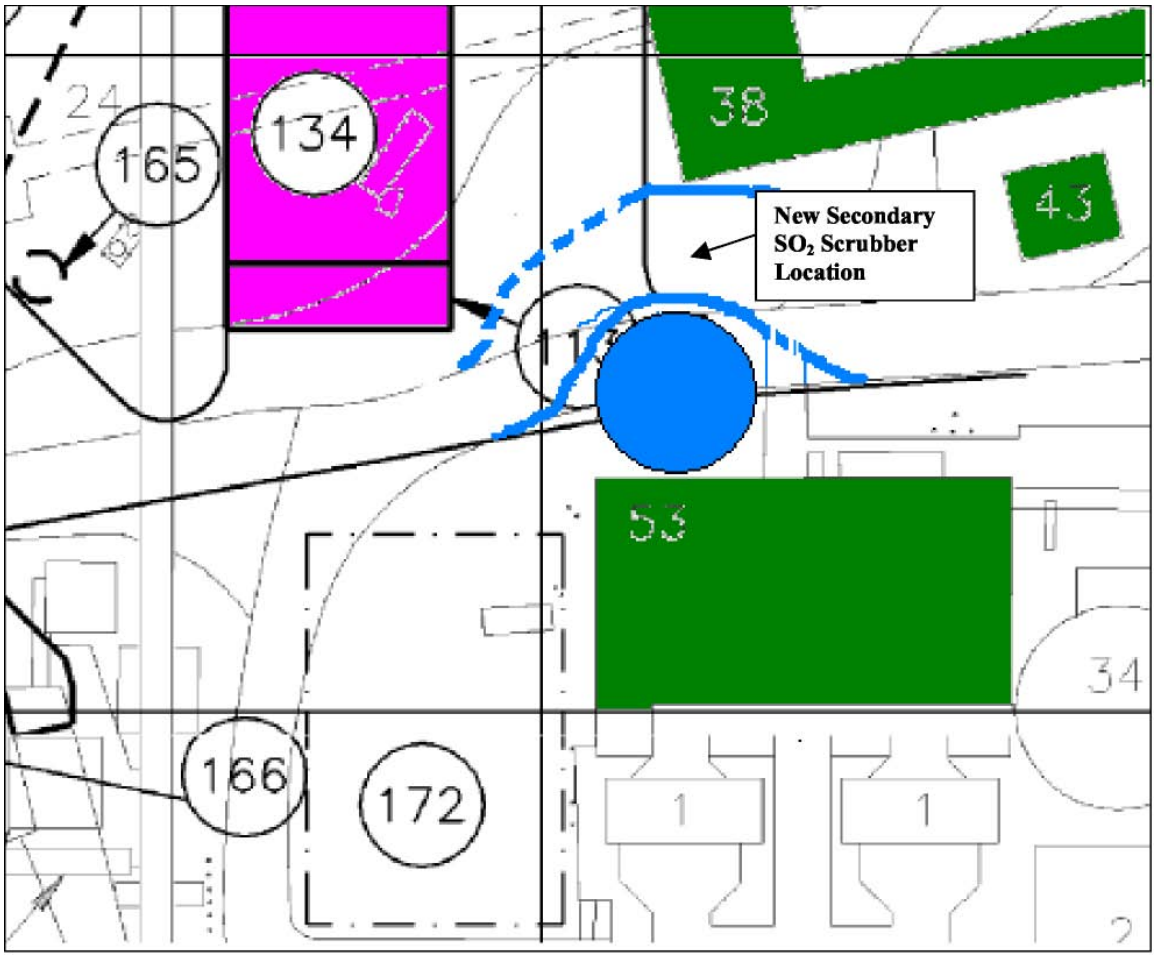


**Figure 3-3: New Secondary $SO_2$ Scrubber Location (Cases 1-4)**

**Secondary FGD Absorber Effluent:**

The existing plant uses lime in its FGD system. In the cost estimate of this plant, it has been assumed that the existing plant disposal facilities can include the relatively small additional load of the secondary regenerator.

### 3.1.2.3 Boiler Island Material and Energy Balance (Cases 1-5)

A simplified process flow diagram for the modified study unit boiler island is shown in Figure 3-4. This simplified diagram is applicable to each of the five cases included in this study. The operation and performance of the existing boiler and electrostatic precipitator (ESP) systems are identical to the Base Case for all five capture cases investigated and are not affected by the

addition of the MEA-based $CO_2$ removal systems. The FGD system is modified for each of the five $CO_2$ removal cases with the addition of a secondary absorber to reduce the $SO_2$ content to less than 10 ppmv. The FGD system modification is described in Section 3.1.2.2.

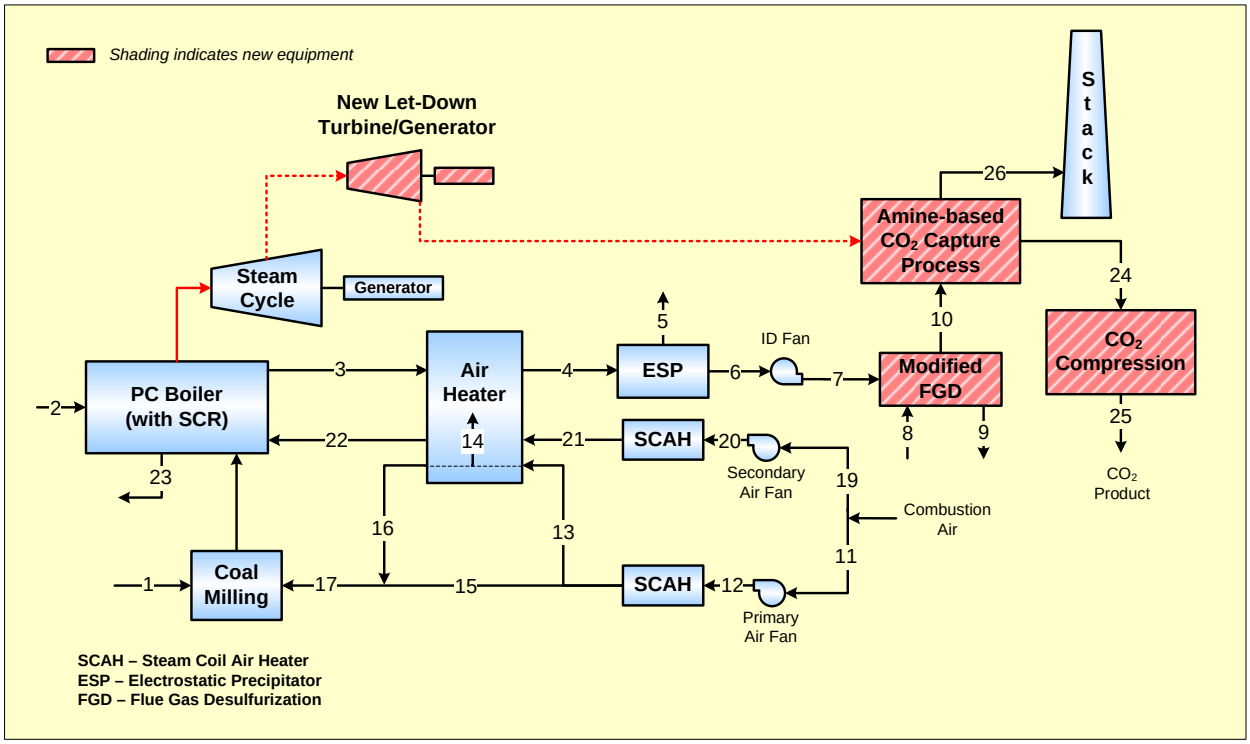


***Material Flow Stream Identification***

| | | | | | |
|---|---|---|---|---|---|
| 1 | Raw Coal to Pulverizers | 9 | FGD System Solids to Disposal | 17 | Mixed Primary Air to Pulverizers |
| 2 | Air Infiltration Stream | 10 | Flue Gas to Stack | 18 | Pulverized Coal and Air to Furnace |
| 3 | Flue Gas from Economizer to Air Heater | 11 | Air to Primary Air Fan | 19 | Secondary Air to Forced Draft Fan |
| 4 | Flue Gas Leaving Air Heater to ESP | 12 | Primary Air to Steam Coil Air Heater | 20 | Secondary Air to Steam Coil Air Heater |
| 5 | Flyash Leaving ESP | 13 | Primary Air to Air Heater | 21 | Secondary Air to Air Heater |
| 6 | Flue Gas Leaving ESP to Induced Draft Fan | 14 | Air Heater Leakage Air Stream | 22 | Heated Secondary Air to Furnace |
| 7 | Flue Gas to Flue Gas Desulfurization System | 15 | Tempering Air to Pulverizers | 23 | Bottom Ash from Furnace |
| 8 | Lime Feed to FGD System | 16 | Hot Primary Air to Pulverizers | | |

**Figure 3-4: Simplified Boiler Island Gas Side Process Flow Diagram for $CO_2$ Separation by Monoethanolamine Absorption (Cases 1-5)**

The overall material and energy balance for the boiler island system shown above in Figure 3-4 is provided in Table 3-19. The flue gases leaving the modified FGD system are ducted to the new MEA system where various levels (depending on the case in question) of the $CO_2$ is removed, compressed, and liquefied for usage or sequestration. The remaining flue gases leaving the new MEA system after removal of carbon dioxide (consisting of primarily oxygen, nitrogen, water vapor, and a relatively small amount of sulfur dioxide and carbon dioxide) are discharged to the atmosphere through the existing Unit 5/6 common stack.

Streams 24, 25, and 26 of Table 3-19 are purposely not filled in. These streams are dependent on the $CO_2$ recovery level and the attributes of these streams are defined in Section 3.1.4.1 for Cases 1-4 and Section 3.1.5.2 for Case 5.

## Table 3-19: Gas Side Boiler Island Material and Material Energy Balance (Cases 1-5)

| Constituent | (Units) | 1 | 2 | 3 | 4 | 5 | 6 | 7 | 8 | 9 | 10 | 11 | 12 | 13 |
|---|---|---|---|---|---|---|---|---|---|---|---|---|---|---|
| $O_2$ | (lbm/hr) | 26586 | 42147 | 101097 | 144817 | | 144817 | 144817 | 5628 | | 144566 | 203237 | 203237 | 112918 |
| $N_2$ | " | 4868 | 139626 | 2797385 | 2942220 | | 2942220 | 2942220 | | | 2942220 | 673283 | 673283 | 374075 |
| $H_2O$ | " | 37820 | 2357 | 228849 | 231294 | | 231294 | 231294 | 258954 | 48234 | 441924 | 11365 | 11365 | 6314 |
| $CO_2$ | " | | | 867210 | 867210 | | 867210 | 867210 | | | 8661102 | | | |
| $SO_2$ | " | | | 20202 | 20202 | | 20202 | 20202 | | | 87 | | | |
| $H_2$ | " | 16102 | | | | | | | | | | | | |
| Carbon | " | 236665 | | | | | | | | | | | | |
| Sulfur | " | 10110 | | | | | | | | | | | | |
| Ca | " | | | | | | | | 13087 | | | | | |
| Mg | " | | | | | | | | 613 | | | | | |
| MgO | " | | | | | | | | | 509 | | | | |
| $MgSO_3$ | " | | | | | | | | | 1251 | | | | |
| $MgSO_4$ | " | | | | | | | | | 76 | | | | |
| $CaSO_3$ | " | | | | | | | | | 34395 | | | | |
| $CaSO_4$ | " | | | | | | | | | 2051 | | | | |
| $CaCO_3$ | " | | | | | | | | | 2520 | | | | |
| Ash/Inerts | " | 42313 | | 33851 | 33851 | 33851 | | | 1017 | 1017 | | | | |
| | | Raw Coal | Leakage Air | Flue Gas to AH | Flue Gas to ESP | Flyash | Flue Gas to ID Fan | Flue Gas to FGD | Lime Slurry | FGD Disposal | Flue Gas to $CO_2$ Sep | Pri Air to PA Fan | PA from PAA Fan | Pri Air to AH |
| Total Gas | (lbm/hr) | | 184130 | 4014743 | 4205743 | | 4205743 | 4205743 | | | 4394900 | 887885 | 887885 | 493308 |
| Total Solids | " | 374455 | | 33851 | 33851 | 33851 | | | 20346 | 41819 | | | | |
| Total Flow | " | 374455 | 184130 | 4048594 | 4239594 | 33851 | 4205743 | 4205743 | 279300 | 90143 | 4394900 | 887885 | 887885 | 493308 |
| | | | | | | | | | | | | | | |
| **Temperature** | (Deg F) | 80 | 80 | 706 | 311 | 311 | 311 | 325 | 80 | 136 | 136 | 80 | 92 | 92 |
| **Pressure** | (Psia) | 14.7 | 14.7 | 14.6 | 14.3 | 14.7 | 14.2 | 15 | 14.7 | 14.7 | 14.7 | 14.7 | 15.6 | 15.6 |
| h sensible | (Btu/lbm) | 0.000 | 0.000 | 161.831 | 57.924 | 57.750 | 57.924 | 61.384 | 0.000 | 14.116 | 14.543 | 0.000 | 2.899 | 2.899 |
| Chemical | ($10^6$ Btu/hr) | 4228.715 | | | | | | | | | | | | |
| Sensible | ($10^6$ Btu/hr) | 0.000 | 0.000 | 655.007 | 245.567 | 1.955 | 243.612 | 258.166 | 0.000 | 3.314 | 63.916 | 0.000 | 2.574 | 1.430 |
| Latent | ($10^6$ Btu/hr) | 0.000 | 2.475 | 240.291 | 242.858 | 0.000 | 242.858 | 242.858 | 0.000 | 0.000 | 464.020 | 11.933 | 11.933 | 6.630 |
| Total Energy(1) | ($10^6$ Btu/hr) | 4228.715 | 2.475 | 895.298 | 488.425 | 1.955 | 486.470 | 501.024 | 0.000 | 3.314 | 527.936 | 11.933 | 14.507 | 8.060 |

| Constituent | (Units) | 14 | 15 | 16 | 17 | 18 | 19 | 20 | 21 | 22 | 23 | 24 | 25 | 26 |
|---|---|---|---|---|---|---|---|---|---|---|---|---|---|---|
| $O_2$ | (lbm/hr) | 43720 | 90319 | 66680 | 156999 | 183585 | 641283 | 641283 | 641283 | 643801 | | | | |
| $N_2$ | " | 144835 | 299208 | 220899 | 520107 | 524975 | 2124443 | 2124443 | 2124443 | 2132785 | | | | |
| $H_2O$ | " | 2445 | 5051 | 3729 | 8779 | 46599 | 35860 | 35860 | 35860 | 36001 | | | | |
| $CO_2$ | " | | | | | | | | | | | | | |
| $SO_2$ | " | | | | | | | | | | | | | |
| $H_2$ | " | | | | | 16102 | | | | | | | | |
| Carbon | " | | | | | 236655 | | | | | | | | |
| Sulfur | " | | | | | 10110 | | | | | | | | |
| Ca | " | | | | | | | | | | | | | |
| Mg | " | | | | | | | | | | | | | |
| MgO | " | | | | | | | | | | | | | |
| $MgSO_3$ | " | | | | | | | | | | | | | |
| $MgSO_4$ | " | | | | | | | | | | | | | |
| $CaSO_3$ | " | | | | | | | | | | | | | |
| $CaSO_4$ | " | | | | | | | | | | | | | |
| $CaCO_3$ | " | | | | | | | | | | | | | |
| Ash/Inerts | " | | | | | 42313 | | | | | | | | |
| | | Air Htr Lkg Air | Temperin g Air | Hot Pri Air | Mixed Pri Air | Coal-Pri Air Mix | Sec Air to FD | Sec air to SCAH | Sec Air to AH | Hot Sec Air | Bottom Ash | $CO_2$ to Comp | $CO_2$ Product | Vent Stream |
| Total Gas | (lbm/hr) | 191000 | 394577 | 291308 | 685885 | | 2801587 | 280157 | 280157 | 281157 | | | | |
| Total Solids | " | | | | | | | | | | 8463 | | | |
| Total Flow | " | 191000 | 394577 | 291308 | 685885 | 1060340 | 2801587 | 280157 | 280157 | 2812587 | 8463 | | | |
| | | | | | | | | | | | | | | |
| **Temperature** | (Deg F) | 92 | 92 | 666 | 339 | | 80 | 86.4 | 86.4 | 616.1 | 2000 | | | |
| **Pressure** | (Psia) | 15.6 | 15.6 | 15.6 | 15.6 | 15.0 | 14.7 | 15.2 | 15.1 | 14.9 | 14.7 | | | |
| **h sensible** | (Btu/lbm) | 2.899 | 2.899 | 145.249 | 63.358 | | 0.000 | 1.549 | 1.549 | 132.582 | 480.000 | | | |
| Chemical | ($10^6$ Btu/hr) | | | | | 4228.715 | | | | | | | | |
| Sensible | ($10^6$ Btu/hr) | 0.554 | 1.144 | 42.312 | 43.456 | | 0.000 | 4.341 | 4.341 | 372.898 | 4.062 | | | |
| Latent | ($10^6$ Btu/hr) | 2.567 | 5.303 | 3.915 | 9.218 | | 37.653 | 37.653 | 37.653 | 37.801 | 0.000 | | | |
| Total Energy(1) | ($10^6$ Btu/hr) | 3.121 | 6.447 | 46.227 | 52.674 | 4281.389 | 37.653 | 41.994 | 41.994 | 410.699 | 40.062 | | | |

(1) Energy Basis: Chemical based on Higher Heating Value (HHV); Sensible energy above 80°F; Latent based on 1050 Btu/lbm of water vapor.

### 3.1.3 Design and Performance of Advanced Amine $CO_2$ Removal Systems (Cases 1-4)

This section describes the advanced amine $CO_2$ Removal Systems used in this study. The amine technology used in this study is similar to existing advanced MEA amine processes. This process tolerates oxygen in the flue gas as well as a limited amount of sulfur dioxide. The process uses an oxygen-activated corrosion inhibitor, which also inhibits amine degradation. Low corrosion rates and minimal loss of the circulating solvent used to absorb $CO_2$ promotes economical and reliable operation. This study is based on the flue gases coming from the AEP's Conesville Unit #5 flue gas desulfurization system, shown later in this section.

ABB Lummus was responsible for the design, performance, and costs for the amine systems. The designs were based on information contained in the open literature (Bailey and Feron, 2005; Chapel and Mariz, 1999; Choi et al., 2005; Choi et al., 2004; Chinn et al., 2004; IEA, 2004) as well as their own proven experience (Barchas and Davis, 1992). The simulation tools used were ProTreat® Version 3.3 and Hysys® Version 2004.2. The resulting regeneration energy from this simulation was 1,550 Btu/lbm-$CO_2$.

There are four $CO_2$ capture cases using an advanced amine $CO_2$ removal systems investigated in this study. The four cases are described as follows:

- **Case 1:** 90% Capture
- C**ase 2:** 70% Capture
- C**ase 3:** 50% Capture
- **Case 4:** 30% Capture

An additional fifth case, also using the advanced amine system was originally planned to be evaluated in this study. This case was defined to be equivalent in $CO_2$ emissions to a NGCC plant without $CO_2$ capture, with $CO_2$ emissions of 362 g/kWh (0.799 lbm/kWh). Because Case 2 (70% $CO_2$ capture) of the current study was found to yield approximately this same amount of $CO_2$ emissions 354 g/kWh (0.78 1 lbm/kWh), the team decided not to evaluate this additional case.

The 90% recovery case (Case 1) processes the entire flue gas stream and adjusts the available process variables within the advanced MEA system to achieve 90% recovery in the absorber. The reduced recovery rates for Cases 2, 3, and 4 can be achieved by two methods. The 70%, 50%, and 30% recovery levels for Cases 2, 3, and 4 respectively are achieved by treating only part of the flue gas stream in the absorber and bypassing the remainder of the flue gas stream directly to the stack. The bypassing method allows the absorber and amine regeneration system to be smaller and less costly. The alternate method would involve treating the entire flue gas stream in the absorber and adjusting the available MEA process parameters to achieve a reduced recovery. This method was not chosen because it requires a larger absorber and a larger amine regeneration system, which was found to be significantly more costly than the selected flue gas bypass method.

### 3.1.4 Process Description - $CO_2$ Removal, Compression, and Liquefaction System (Cases 1-4)

The following process description applies to all the advanced amine cases in this study (i.e., Cases 1-4). The $CO_2$ Recovery Plant removes $CO_2$ from exhaust gas of the existing Conesville

#5 coal-fired steam boiler. The treated flue gas is returned to the existing stack. The captured $CO_2$ is compressed, dehydrated, and then liquefied in preparation for transport to a consumer.

Since the flue gas conditioning equipment flow scheme includes an existing blower, the pressure profile of the existing power generation equipment does not change from today's operation. To force the flue gas from the secondary flue gas desulfurizer (FGD) through the $CO_2$ Absorber, the pressure of the flue gas after the FGD is boosted ~0.1 bar (1.5 psi) by a motor driven fan. As the power consumption of the fan is considerable, the location of the absorbers is as close as possible to the new secondary FGD system and the existing stack, to minimize draft loss. The blower will run at constant speed. Each blower, provided as part of the boiler flue gas conditioning equipment, is equipped with its own suction and a discharge damper operated pneumatically. The suction damper controls the suction pressure to adjust for the flow variation resulting from the power plant performance. The suction pressure control will avoid any surges to blower. The discharge damper is an isolation damper.

### Direct Contact Cooling

The following description refers to Figure 3-5. The direct contact cooler (DCC) Flue Gas Cooler is a packed column where hot 58°C (136°F) flue gas is brought into intimate contact with a recirculating stream of cool water. Physically the DCC and Absorber have been combined into a single compartmentalized tower. The lower compartment is designed to support the Absorber so that the top head of the DCC is the bottom head of the Absorber. Effectively, this dividing head acts as a chimney tray with a number of upward extending chimneys, which provide passages so the flue gas may flow directly from the DCC into the Absorber.

Theoretically, a direct contact cooler is capable of cooling the gas to a very close approach in a short bed. When the hot gas enters the DCC, it contains water but is highly superheated. At the bottom end of the bed, the gas quickly cools down to a temperature called the "Adiabatic Saturation Temperature" (AST). This is the temperature the gas reaches when some of its own heat content has been used to vaporize just the exact amount of water to saturate the gas.

Up to the point when the AST is reached, the mass flow of the gas stream increases due to evaporation of water. At the AST, water begins to condense as the gas is cooled further. As the gas travels up the column and is cooled further, more water is condensed. This internal refluxing increases the vapor/liquid (V/L) traffic at the bottom end of the bed significantly beyond the external flows and must be considered in the hydraulic design.

The water stream leaving the bottom of the DCC contains the water fed to the top as well as any water, which has condensed out of the flue gas. The condensed water may be somewhat corrosive due to sulfur and nitrogen oxides, which are present in the flue gas. Therefore, instead of using the condensate in the process, it will be blown down from the system. For the DCC to be effective, the temperature of the leaving water must always be lower than the AST.

The DCC Water Pump circulates most of the water leaving the bottom of the DCC back to the top of the direct contact cooler. However, before sending it back to the column, the water stream is first filtered in the DCC Water Filter and then cooled in DCC Water Cooler E-108. The temperature of the cooled water is controlled by a cascade loop, which maintains a constant flue gas exit temperature of 46°C (115°F).

Filtration is necessary to remove any particulate matter, which may enter the DCC in the flue gas. The blow down is taken out after the filter but before the cooler and mixed into the return water of cooler E-108. This way the cooler does not have to handle the extra duty, which would otherwise be imposed by the blow down.

**Absorption**

The following description refers to Figure 3-5.

$CO_2$ Absorber:

From the DCC the cooled flue gas enters the bottom of the $CO_2$ Absorber and flows up the tower counter-current through a stream of 30-wt% MEA solution. The lean MEA solution (LAM) enters the top of the column and heats up gradually as $CO_2$ is absorbed. By the time the stream leaves the bottom of the tower it has gained approximately 11°C (20°F). The tower has been designed to remove 90% of the $CO_2$ from the incoming gas. The $CO_2$ loading in LAM is approximately 0.19 mol $CO_2$/mol MEA, while the loading of the rich amine leaving the bottom is approximately 0.49 mol $CO_2$/mol MEA.

To maintain water balance in the process, the temperature of the LAM feed should be close to that of the feed gas stream. Thus, with feed gas temperature fixed at 46°C (115°F), the temperature of the LAM stream must also be close to 46°C (115°F), preferably within 5.5°C (10°F). If the feed gas comes in at a higher temperature than the LAM, it brings in excess moisture, which condenses in the Absorber and becomes excess water. Unless this water is purged from the system, the concentration of MEA will decrease and the performance of the system will suffer. If, on the other hand, the gas feed is colder than the LAM, it heats up in the tower and picks up extra moisture, which is then carried out of the system by the vent gas. The result is a water deficiency situation because more water is removed than comes into the system.

For the reasons explained above, it is essential that both the temperature of the flue gas and that of the LAM be accurately controlled. In fact, it is best to control one temperature and adjust the temperature of the other to maintain a fixed temperature difference.

The rich MEA solvent solution from the bottom of the absorber at 52°C (125°F) is heated to 96°C (205°F) by heat exchange with lean MEA solvent solution from the stripping column and then fed near the top of the stripping column. The lean MEA solvent solution is partially cooled by heat exchange with rich MEA and is further cooled to 4°C (105°F) by exchange with cooling water and fed back to the absorber to complete the circuit.

The $CO_2$ absorber contains two beds of structured packing and a “Wash Zone” at the very top of the column to reduce water and MEA losses. A liquid distributor is provided at the top of each bed of structured packing. There are several reasons for selecting structured packing for this service:

- Very low pressure drop which minimizes fan horsepower
- High contact efficiency / low packing height
- Good tolerance for mal-distribution in a large tower
- Smallest possible tower diameter
- Light weight

At the bottom of the tower, there is the equivalent of a chimney tray, which serves as the bottom sump for the absorber. Instead of being flat like a typical chimney tray, it is a standard dished head with chimneys. The hold-up volume of the bottom sump is sufficient to accept all the liquid held up in the packing both in the $CO_2$ absorber and in the Wash Zone. The Rich Solvent Pumps take suction from the chimney tray.

Absorber Wash Zone:

The purpose of the Wash Zone at the top of the tower is to minimize MEA losses both due to mechanical entrainment and also due to evaporation. This is achieved by recirculating wash water in this section to scrub most of the MEA from the lean gas exiting the Absorber. The key to minimizing MEA carryover is a mist separator pad between the wash section and the Absorber. The Wash Water Pump takes water from the bottom of the wash zone and circulates it back to the top of the wash zone.

The key to successful scrubbing is to maintain a low concentration of MEA in the circulating water. As MEA concentration is increased, the vapor pressure of MEA becomes higher and, consequently, the MEA losses are higher. Therefore, relatively clean water must be fed to the wash zone as make-up while an equal amount of MEA laden water is drawn out. A seal accomplishes this and maintains a level on the chimney tray at the bottom of the wash section. Overflow goes to the main absorber. Make-up water comes from the overhead system of the Solvent Stripper.

The lean flue gas leaving the wash zone is released to the existing flue gas stack at atmospheric pressure.

Rich/Lean Solvent Exchanger - E-100:

The Rich/Lean Solvent Exchanger is a plate type exchanger with rich MEA solution on one side and lean MEA solution on the other. The purpose of the exchanger is to recover as much heat as possible from the hot lean solvent at the bottom of the Solvent Stripper by heating the rich solvent feeding the Solvent Stripper. This reduces the duty of the Solvent Stripper Reboiler. This exchanger is the single most important item in the energy economy of the entire $CO_2$ Recovery Unit.

Lean Amine Cooler – E-104:

A plate frame water-cooled exchanger was added on the lean amine stream leaving the Rich/Lean Solvent Exchanger to reduce the plot space requirement and overall cost of the project. The lean amine cooler further cools the lean amine coming from the rich/lean exchanger E-100 from 66°C to 41°C (150°F to 105°F) with plant cooling water. Cooled amine from E-104 flows to the top of the absorber.

**Stripping**

Solvent Stripper:

The following description refers to Figure 3-5. The purpose of the Solvent Stripper is to separate $CO_2$ from the $CO_2$ rich solvent. The Solvent Stripper contains a top section with trays and a bottom section with structured packing. The top section of the stripper is a water wash zone designed to limit the amount of solvent (MEA) vapors entering the stripper overhead system.

The hot wet vapors from the top of the stripper contain the recovered $CO_2$, along with water vapor, and a limited amount of solvent vapor. The overhead vapors are cooled by water in the Solvent Stripper Condenser E-105, which is commonly called the reflux condenser, where most of the water and solvent vapors condense. The $CO_2$ does not condense. The condensed overhead liquid and $CO_2$ are separated in a reflux drum. $CO_2$ flows to the $CO_2$ Compression section on pressure control and the condensed liquid (called reflux) is returned to the top of the stripper. Rich solvent is fed to the stripper at the top of the packed section. As the solvent flows down over the packing to the bottom, hot vapor from the reboiler strips the $CO_2$ from the solution. The final stripping action occurs in the reboiler E-106.

Solvent Stripper Reboiler E-106:

The steam-heated reboiler consists of several plate frame thermo-siphon type exchangers arranged concentrically around the base of the Stripper. Circulating flow of the solvent through the reboiler is driven by gravity and density differences.

Solvent Reclaimer:

The Solvent Reclaimer is a horizontal heat exchanger. Certain acidic gases present in the flue gas feeding the $CO_2$ absorber form compounds with the MEA in the solvent solution, which cannot be regenerated by application of heat in the solvent stripper reboiler. These materials are referred to as “Heat Stable Salts” (HSS). A small slipstream of the lean solvent from the discharge of the Solvent Stripper Bottoms Pump is fed to the Solvent Reclaimer. The reclaimer restores the MEA usefulness by removing the high boiling and non-volatile impurities, such as HSS, suspended solids, acids, and iron products from the circulating solvent solution. Soda ash is added into the reclaimer to free MEA from its bond with sulfur oxides by its stronger basic attribute. This allows the MEA to be vaporized into the circulating mixture, minimizing MEA loss. This process is important in reducing corrosion, and fouling in the solvent system. The reclaimer bottoms are cooled intermittently with cooling tower water prior to being loaded on a tank truck.

Solvent Stripper Condenser E-105:

The solvent stripper condenser is a series water-cooled plate frame type heat exchangers. The purpose of the condenser is to completely condense all components contained in the overhead vapor stream leaving the stripper which are condensable under the operating conditions. Boiler feed water at 43°C (110°F) (integrated with the steam/water cycle) and 27°C (80°F) cooling tower water are used as the condensing medium. Components that do not condense include nitrogen, carbon dioxide, oxygen, nitrogen oxides and carbon monoxide. The water vapor and MEA solvent vapor will condense, and the condensed water will dissolve a small amount of carbon dioxide. This exchanger uses some of the cooling water capacity freed up due to the reduced load on the surface condensers of the existing Conesville #5 power plant.

Solvent Stripper Reflux Drum:

The reflux drum provides space and time for the separation of liquid and gases and provides liquid hold-up volume for suction to the reflux pumps.

Solvent Stripper Reflux Pump:

This pump takes suction from the reflux drum and discharges on flow control to the stripper top tray as reflux on flow control.

Semi-Lean Flash Drum:

Rich amine is pumped from the bottom of the absorber and is split into two streams. The first stream is heated in cross exchangers E-102 and E-100 with hot stripper bottoms and the preheated rich amine flowing to the stripper. The other part of the stream is flashed to produce steam, which is used in the stripping column. The Semi-Lean Flash Drum reduces the amount of steam needed in the reboiler. The rich amine prior to being flashed is heated in a pair of exchangers. The first is the semi-lean cooler E-101, where it is cross-exchanged with hot flashed semi-lean amine from the flash drum. The second is the flash preheater E-102, which is heated by hot stripper bottoms on its way to the amine cross exchanger.

Solvent Filtration Package:

The pre-coat filter is no ordinary filter; it is a small system. The main component is a pressure vessel, which has a number of so called “leaves” through which MEA flows. The leaves have a thin (~0.3 cm or 1/8 inch) coating of silica powder, which acts to filter any solids. For the purposes of such application the power is called “filter aid.”

To cover the leaves with the filter aid, the filter must be “pre-coated” before putting it into service. This is accomplished by mixing filter aid in water in a predetermined ratio (typically 10 wt%) to prepare slurry. This takes place in an agitated tank. A pump, which takes its suction from this tank, is then operated to pump the slurry into the filter. Provided the flow rate is high enough, the filter aid is deposited on the leaves while water passes through and can be recycled back to the tank. This is continued until the water in the tank becomes clear, indicating that all the filter aid has been transferred.

The volume of a single batch in the tank is typically 125% of the filter volume because there must be enough to fill the vessel and have some excess left over so the level in the tank is maintained and circulation can continue. In this design, water from the Stripper overhead is used as make-up water to fill the tank. This way the water balance of the plant is not affected.

During normal operation, it is often beneficial to add so called “body” which is the same material as the pre-coat but may be of different particle size. The body is also slurried in water but is continually added to the filter during operation. This keeps the filter coating porous and prevents rapid plugging and loss of capacity. As the description suggests, an agitated tank is needed to prepare the batch. A metering pump is then used to add the body at preset rate to the filter.

When the filter is exhausted (as indicated by pressure drop), it is taken off line so the dirty filter aid can be removed and replaced with fresh material. To accomplish this, the filter must be drained. This is done by pressurizing the filter vessel with nitrogen and pushing the MEA solution out of the filter. After this, the filter is depressurized. Then, a motor is started to rotate the leaves so a set of scrapers will wipe the filter cake off the leaves. The loosened cake then falls off and into a conveyor trough in the bottom of the vessel. This motor-operated conveyor then pushes the used cake out of the vessel and into a disposal container. The rejected cake has the consistency of toothpaste. This design is called “dry cake” filter and minimizes the amount of waste produced.

For this application, about 2% of the circulating MEA will be forced to flow through the filter. A Filter Circulating Pump draws the liquid through the filter. The advantage of placing the pump on the outlet side of the filter is reduced design pressure of the filter vessel and associated piping.

In spite of the restriction on its suction side, ample NPSH is still available for the pump. Flow is controlled downstream of the pump.

The MEA is also passed through a bed of activated carbon to reduce residual hydrocarbons. The presence of hydrocarbons in the amine can cause foaming problems. This study assumes that the bed is changed four times per year.

### $CO_2$ Compression, Dehydration, and Liquefaction

The following description refers to Figure 3-6. $CO_2$ from the solvent stripper reflux drum, saturated with water, is compressed in a three-stage centrifugal compressor using 43°C (110°F) boiler feed water for interstage and after compression cooling. The heated boiler feedwater is returned to the existing feedwater system of the steam/water cycle, and this heat integration helps improve overall plant efficiency. The interstage coolers for first and second stage are designed to supply 52°C (125°F) $CO_2$ to the compressor suction.

Most of the water in the wet $CO_2$ stream is knocked out during compression and is removed from intermediate suction drums. A $CO_2$ dryer is located after the third stage to meet the water specifications in the $CO_2$ product. The water-free $CO_2$ is liquefied after the third stage of compression at about 13 bara (194 psia) by the use of a propane refrigeration system and is further pumped with a $CO_2$ pump to the required battery limit pressure of 139 bara (2,015 psia).

The propane refrigeration system requires centrifugal compressors, condensers, economizers, and evaporators to produce the required cold. The centrifugal compressor is driven by an electric motor and is used to raise the condensing temperature of the propane refrigerant above the temperature of the available cooling medium, which in this study is 110°F boiler feed water. The condenser is used to cool and condense the discharged propane vapor from the compressor back to its original liquid form. The economizer, which improves the refrigerant cycle efficiency, is designed to lower the temperature of the liquid propane by flashing or heat exchange. The evaporator liquefies the $CO_2$ vapor by transferring heat from the $CO_2$ vapor stream to the boiling propane refrigerant.

### $CO_2$ Dryer

The following description refers to Figure 3-6. The purpose of the $CO_2$ dryer is to reduce the moisture content of the $CO_2$ product to a value less than pipeline transport specifications. The dryer package includes four dryer vessels loaded with Type 3A molecular sieve, three of which are in service while one is being regenerated or is on standby. The package also includes a natural gas fired regeneration heater and an air-cooled regeneration gas cooler. A water knockout, downstream from the gas cooler, removes the condensed water. The dryers are based on a 12-hour cycle.

The dryer is located on the discharge side of the third stage of the $CO_2$ Compressor. The temperature of the $CO_2$ stream entering the dryer is 125°F.

Once a bed is exhausted, it is taken off line and a slipstream of effluent from the on line beds is directed into this dryer after being boosted in pressure by a compressor. Before the slipstream enters the bed, which is to be regenerated, it is heated to a high temperature. Under this high temperature, moisture is released from the bed and carried away in the $CO_2$ stream. The

regeneration gas is then cooled to the feed gas temperature to condense any excess moisture. After this, the regeneration gas stream is mixed with the feed gas upstream of the third stage knockout drum.

All the regeneration operations are controlled by a programmable logic controller (PLC), which switches the position of several valves to direct the flow to the proper dryer. It also controls the regeneration compressor, heater, and cooler.

### Corrosion Inhibitor

Corrosion inhibitor chemical is injected into the process to help control the rate of corrosion throughout the $CO_2$ recovery plant system. The inhibitor is stored in a tank and is injected into the system via an injection pump (not shown in Figure 3-6). The pump is a diaphragm-metering type pump.

### Process Flow Diagrams

The process flow diagram for the $CO_2$ recovery section is shown in Figure 3-5 and for the $CO_2$ compression, dehydration and liquefaction process is shown in Figure 3-6.

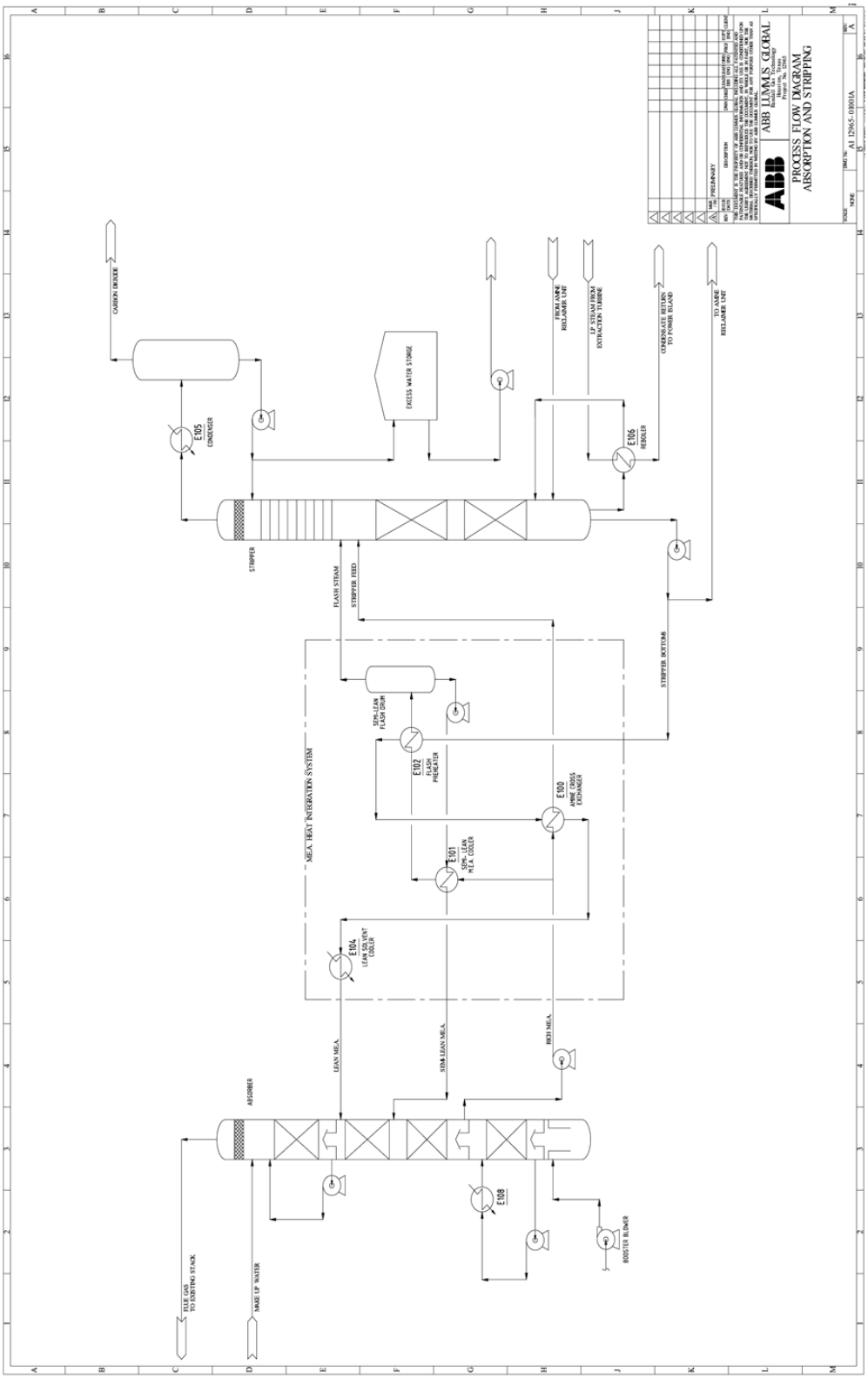


**Figure 3-5: Advanced MEA Process Flow Diagram (Cases 1-4)**

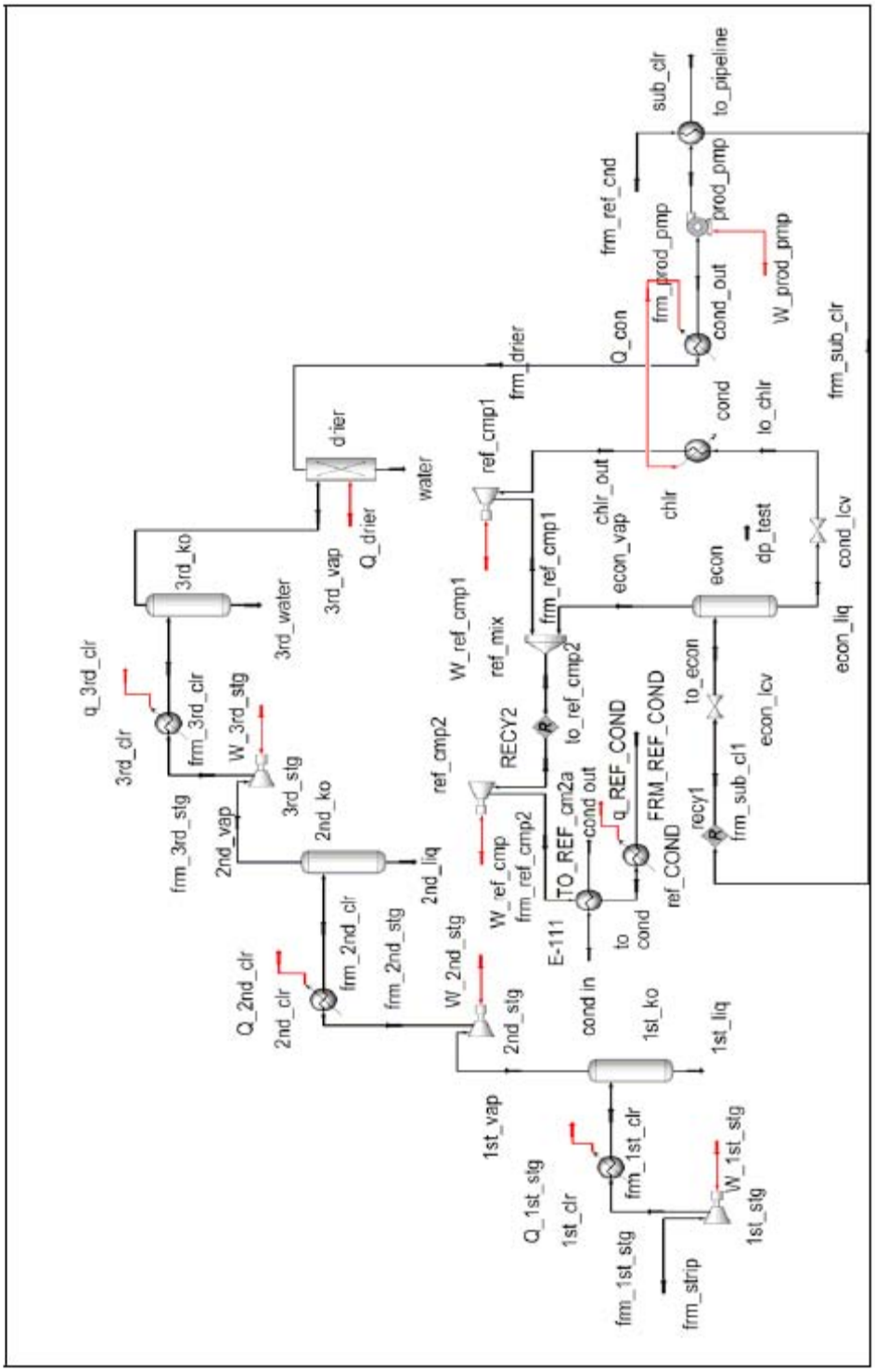


**Figure 3-6: $CO_2$ Compression**

#### 3.1.4.1 Overall Material and Energy Balance - $CO_2$ Removal, Compression, and Liquefaction System (Cases 1-4)

This section provides material and energy balances for the $CO_2$ Removal and Compression Systems for Cases 1-4. Additionally, various other common parameters of comparison are provided for these systems.

### Advanced Amine Plant Performance

Table 3-20 and Table 3-21 compare the amine plant material balance and energy demands, respectively, for each recovery case. The material balance shown in Table 3-20 is for the complete amine plant, as is Table 3-21. The $CO_2$ recovery cases below 90% (Cases 2, 3, and 4) are accomplished by combining the flue gas stream that bypasses the absorber, with the flue gas stream treated by the absorber, as shown in Figure 3-7. Even though the absorber and stripper recovery efficiencies are the same for each case, the net $CO_2$ recovery is lower due to the bypass.

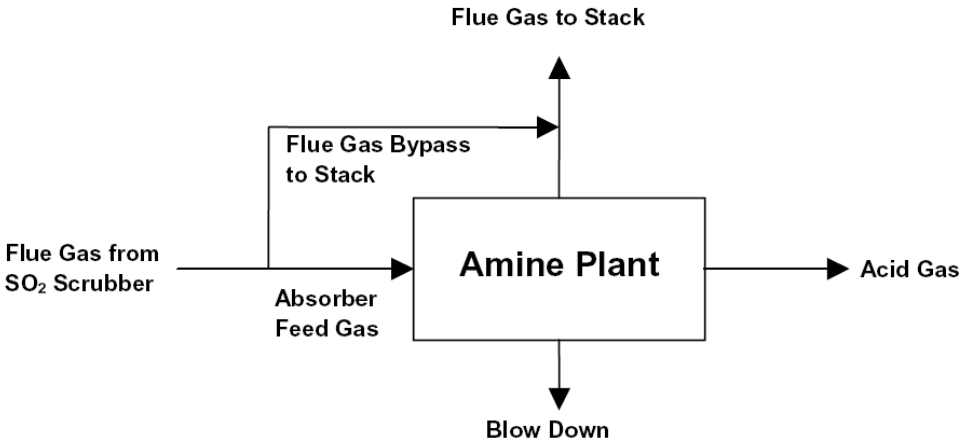


**Figure 3-7: Flue Gas Bypass System used for 70%, 50%, and 30% $CO_2$ Absorption Cases (Cases 2, 3, and 4)**

**Table 3-20: Overall Material Balance for Amine Plants (Cases 1-4; 90%-30% $CO_2$ Capture)**

| Amine Plant | Case 1 (90% Capture) | Case 2 (70% Capture) | Case 3 (50% Capture) | Case 4 (30% Capture) |
|---|---|---|---|---|
| **Feed to Absorber** | moles/hr | moles/hr | moles/hr | moles/hr |
| $CO_2$ | 19680 | 15306 | 10934 | 6560 |
| $H_2O$ | 24530 | 19078 | 13628 | 8176 |
| $N_2$ | 105020 | 81682 | 58344 | 35006 |
| $O_2$ | 4518 | 3514 | 2510 | 1506 |
| Total | 153746 | 119582 | 85416 | 51248 |
| | | | | |
| **From Top of Absorber** | moles/hr | moles/hr | moles/hr | moles/hr |
| $CO_2$ | 1962 | 1552 | 1102 | 650 |
| $H_2O$ | 36460 | 28354 | 20252 | 12150 |
| $N_2$ | 105016 | 81678 | 58342 | 35004 |
| $O_2$ | 4518 | 3514 | 2510 | 1506 |
| Total | 147954 | 115098 | 82204 | 49312 |
| | | | | |
| **Absorber Bypass*** | moles/hr | moles/hr | moles/hr | moles/hr |
| $CO_2$ | 0 | 4374 | 8746 | 13120 |
| $H_2O$ | 0 | 5452 | 10902 | 16354 |
| $N_2$ | 0 | 23338 | 46676 | 70014 |
| $O_2$ | 0 | 1004 | 2008 | 3012 |
| Total | 0 | 34166 | 68330 | 102498 |
| | | | | |
| **To Stack** | moles/hr | moles/hr | moles/hr | moles/hr |
| $CO_2$ | 1962 | 5924 | 9846 | 13770 |
| $H_2O$ | 36460 | 33806 | 31154 | 28504 |
| $N_2$ | 105016 | 105016 | 105018 | 105018 |
| $O_2$ | 4518 | 4518 | 4518 | 4518 |
| Total | 147954 | 149264 | 150536 | 151810 |
| | | | | |
| **Acid Gas** | moles/hr | moles/hr | moles/hr | moles/hr |
| $CO_2$ | 17720 | 13766 | 9822 | 5906 |
| $H_2O$ | 1042 | 810 | 578 | 348 |
| $N_2$ | 0 | 0 | 0 | 0 |
| $O_2$ | 0 | 0 | 0 | 0 |
| Total | 18762 | 14576 | 10400 | 6252 |
| | | | | |
| | moles/hr | moles/hr | moles/hr | moles/hr |
| $H_2O$ Blow Down | 10714 | 8284 | 5860 | 3468 |

Note: “Bypass” method used to capture <90% $CO_2$

**Table 3-21: Energy and Process Demands (Cases 1-4; 90%-30% $CO_2$ Capture)**

| Total Plant | Case 1 (90% Capture) | Case 2 (70% Capture) | Case 3 (50% Capture) | Case 4 (30% Capture) |
|---|---|---|---|---|
| $CO_2$ Captured, Metric TPD | 8,481 | 6,595 | 4,706 | 2,829 |
| $CO_2$ Captured, Short TPD | 9,349 | 7,270 | 5,187 | 3,119 |
| $CO_2$ captured, $10^6$-scfd | 161.2 | 125.4 | 89.5 | 53.8 |
| $H_2O$ Makeup to Amine Plant, gpm | 427 | 331 | 235 | 140 |
| $H_2O$ Makeup to Cooling Tower, gpm | 2,091 | 1,627 | 1,161 | 690 |
| MEA Concentration, wt% | 30.0% | 30.0% | 30.0% | 30.0% |
| $CO_2$ Absorbed in the Absorber, % | 90.0% | 89.9% | 89.8% | 90.0% |
| Stripper Energy, Btu/lbm-$CO_2$ Absorbed | 1,548 | 1,548 | 1,551 | 1,549 |
| Solvent requirement, Gal MEA/lbm $CO_2$ Absorbed | 2.042 | 2.044 | 2.047 | 2.042 |
| Steam requirement, lbm/lbm $CO_2$ Absorbed | 1.667 | 1.669 | 1.669 | 1.667 |
| Lean Load, Mole $CO_2$/Mole MEA | 0.188 | 0.190 | 0.190 | 0.186 |
| Absorber Diameter, Ft | 34.1 | 30.0 | 25.4 | 27.8 |
| Stripper Diameter, Ft | 22.0 | 19.3 | 16.3 | 17.9 |
| Steam to Stripper, $10^3$-lbm/h | 1,300 | 1,010 | 722 | 433 |
| Cooling Water (CW), gpm | 69,694 | 54,217 | 38,693 | 22,991 |
| Auxiliary power, Total kW Demand | 54,939 | 42,697 | 30,466 | 18,247 |
| Auxiliary power, kW w/o $CO_2$ Compression | 11,802 | 9,169 | 6,549 | 3,866 |
| Auxiliary power, kWh/Short Ton (ST) $CO_2$ | 141 | 141 | 141 | 140 |
| Auxiliary power, kWh/ST $CO_2$ w/o $CO_2$ Compression | 30 | 30 | 30 | 30 |
| Cooling Water, Gallons/ST $CO_2$ | 10,735 | 10,739 | 10,742 | 10,615 |
| Cooling Water, Cubic Meters/Metric Ton $CO_2$ | 46 | 46 | 46 | 45 |

## $CO_2$ Compression and Liquefaction Plant Performance

This section provides system schematics, material and energy balances, as well as heat duties and power requirements for the Compression and Liquefaction systems for Cases 1-4.

Table 3-22 shows the $CO_2$ compression and liquefaction system material and energy balance for Case 1 with 90% $CO_2$ recovery. Figure 3-8 shows the compression and liquefaction system schematic with heat duties and power requirements indicated.

Table 3-23 shows the $CO_2$ compression and liquefaction system material and energy balance for Case 2 with 70% $CO_2$ recovery. Figure 3-9 shows the compression and liquefaction system schematic with heat duties and power requirements indicated.

Table 3-24 shows the $CO_2$ compression and liquefaction system material and energy balance for Case 3 with 50% $CO_2$ recovery. Figure 3-10 shows the compression and liquefaction system schematic with heat duties and power requirements indicated.

Table 3-25 shows the $CO_2$ compression and liquefaction system material and energy balance for Case 4 with 30% $CO_2$ recovery. Figure 3-11 shows the compression and liquefaction system schematic with heat duties and power requirements indicated.

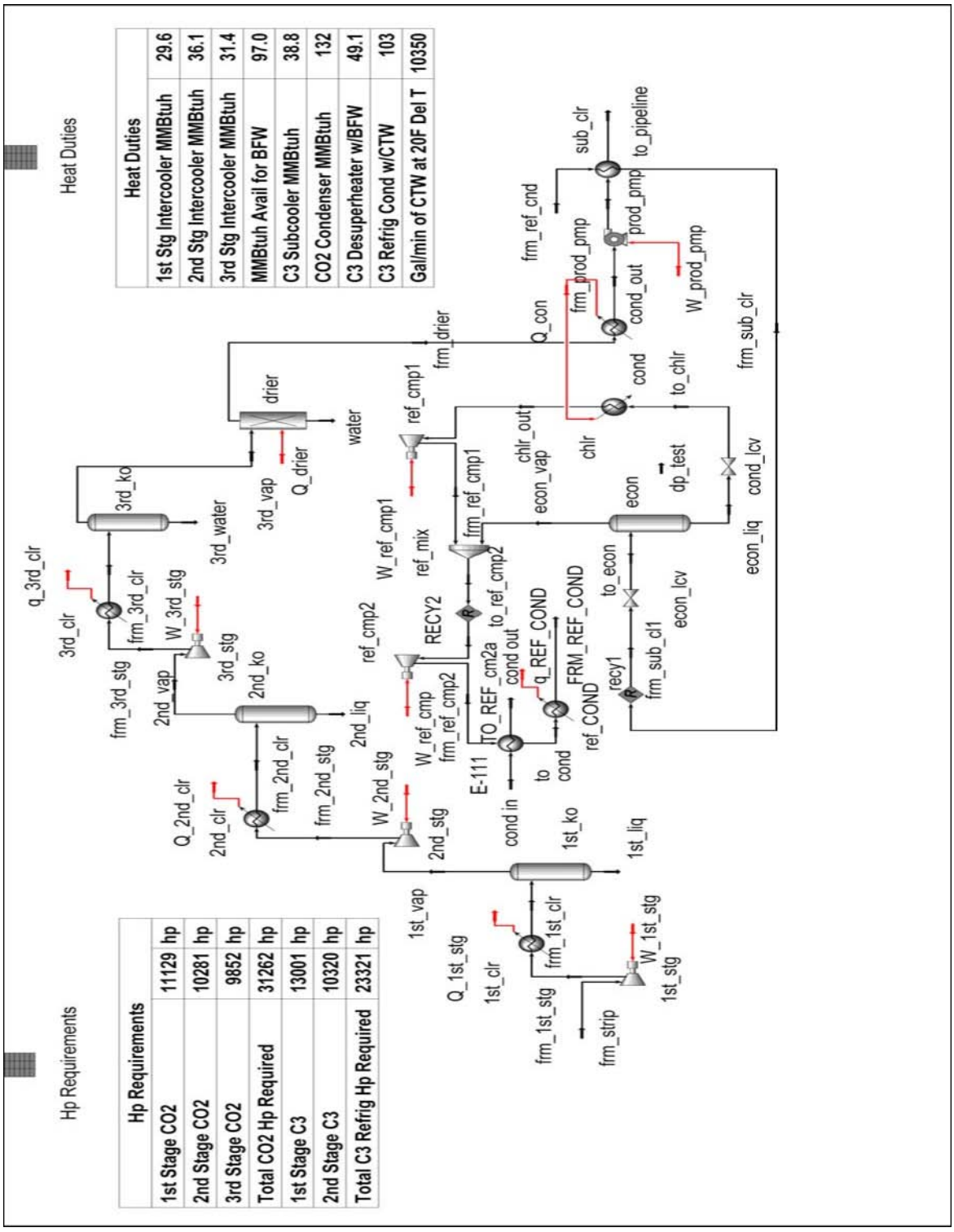


**Figure 3-8: Case 1 $CO_2$ Compression, Dehydration, and Liquefaction Schematic (90% $CO_2$ Recovery)**

**Table 3-22: Case 1 Material & Energy Balance for $CO_2$ Compression, Dehydration, and Liquefaction (90% $CO_2$ Recovery)**

| STREAM NAME | | Total Acid Gas from Stripper | First Stage Discharge | To Second Stage | First Stage Water KO | From Second Stage | 2nd Stage Discharge | To 3rd Stage | 2nd Stage Water KO | From 3rd Stage | From 3rd Stage Cooler | 3rd Stage Water KO | To Drier | Water From Drier | From Drier To Condenser | Condensed CO2 Product | From C3 Occupachete r ETH | Refrig Compressor Discharge | Section of 2nd Refrig Compressor | Discharge from 1st Refrig Compr | Refrig from CO2 Condenser |
|---|---|---|---|---|---|---|---|---|---|---|---|---|---|---|---|---|---|---|---|---|---|
| PFD STREAM NO. | | frm_strip | frm_1st_clr | 1st_vap | 1st_liq | frm_2nd_stg | frm_2nd_clr | 2nd_vap | 2nd_liq | frm_3rd_stg | frm_3rd_clr | 3rd_water | 3rd_vap | water | frm_drier | cond out | to cond | m_ref_cmp | o_ref_cmp | m_ref_cmp | chlr_out |
| VAPOR FRACTION | Molar | 1.000 | 0.993 | 1.000 | 0.000 | 1.000 | 0.974 | 1.000 | 0.000 | 1.000 | 0.988 | 0.000 | 1.000 | 0.000 | 1.000 | 0.000 | 1.000 | 1.000 | 1.000 | 1.000 | 1.000 |
| TEMPERATURE | °F | 115.0 | 125 | 125 | 125 | 275 | 125 | 125 | 125 | 275 | 125 | 125 | 125 | 125 | 125 | 240 | 125 | 264 | 174 | 174 | 56 |
| PRESSURE | PSIA | 19.0 | 41 | 41 | 41 | 95 | 89 | 89 | 89 | 206 | 200 | 200 | 200 | 195 | 195 | 95 | 199 | 234 | 85 | 85 | 20 |
| MOLAR FLOW RATE | lbmol/hr | 18,762 | 18,762 | 18,625 | 136.50 | 18,625 | 18,625 | 18,142.03 | 483 | 18,142 | 18,142.03 | 218.92 | 17,923.11 | 205.61 | 17,717.51 | 20,119.70 | 16,100.00 | 16,100.0 | 16,100.00 | 16,100.00 | 16,100.00 |
| MASS FLOW RATE | lb/hr | 798,595.3 | 798,595.3 | 796,133.6 | 2,461.7 | 796,133.6 | 796,133.6 | 787,411.1 | 8,722.4 | 787,411.1 | 787,411.1 | 3,965.2 | 783,445.9 | 3,704.0 | 779,741.9 | 362,458.5 | 709,961.7 | 709,961.7 | 709,961.7 | 709,961.7 | 709,961.7 |
| ENERGY | Btu/hr | -3.10E+09 | -3.10E+09 | -3.09E+09 | -1.68E+07 | -3.09E+09 | -3.10E+09 | -3.04E+09 | -5.89E+07 | -3.01E+09 | -3.04E+09 | -2.67E+07 | -3.02E+09 | -2.50E+07 | -3.00E+09 | -2.41E+09 | -7.16E+08 | -6.67E+08 | -6.94E+08 | -6.94E+08 | -7.27E+08 |
| **COMPOSITION** | **Mol %** | | | | | | | | | | | | | | | | | | | | |
| CO2 | | 94.44% | 94.44% | 95.14% | 0.08% | 95.14% | 95.14% | 97.66% | 0.17% | 97.66% | 97.66% | 0.38% | 98.65% | 0.00% | 100.00% | 0.00% | 0.00% | 0.00% | 0.00% | 0.00% | 0.00% |
| H2O | | 5.56% | 5.56% | 4.86% | 99.92% | 4.86% | 4.86% | 2.34% | 99.83% | 2.34% | 2.34% | 99.62% | 1.15% | 100.00% | 0.00% | 100.00% | 0.00% | 0.00% | 0.00% | 0.00% | 0.00% |
| Nitrogen | | 0.00% | 0.00% | 0.00% | 0.00% | 0.00% | 0.00% | 0.00% | 0.00% | 0.00% | 0.00% | 0.00% | 0.00% | 0.00% | 0.00% | 0.00% | 98.00% | 98.00% | 98.00% | 98.00% | 98.00% |
| Propane | | 0.00% | 0.00% | 0.00% | 0.00% | 0.00% | 0.00% | 0.00% | 0.00% | 0.00% | 0.00% | 0.00% | 0.00% | 0.00% | 0.00% | 0.00% | 0.00% | 0.00% | 0.00% | 0.00% | 0.00% |
| Oxygen | | 0.00% | 0.00% | 0.00% | 0.00% | 0.00% | 0.00% | 0.00% | 0.00% | 0.00% | 0.00% | 0.00% | 0.00% | 0.00% | 0.00% | 0.00% | 0.00% | 0.00% | 0.00% | 0.00% | 0.00% |
| Ethane | | 0.00% | 0.00% | 0.00% | 0.00% | 0.00% | 0.00% | 0.00% | 0.00% | 0.00% | 0.00% | 0.00% | 0.00% | 0.00% | 0.00% | 0.00% | 1.00% | 1.00% | 1.00% | 1.00% | 1.00% |
| i-Butane | | 0.00% | 0.00% | 0.00% | 0.00% | 0.00% | 0.00% | 0.00% | 0.00% | 0.00% | 0.00% | 0.00% | 0.00% | 0.00% | 0.00% | 0.00% | 0.50% | 0.50% | 0.50% | 0.50% | 0.50% |
| n-Butane | | 0.00% | 0.00% | 0.00% | 0.00% | 0.00% | 0.00% | 0.00% | 0.00% | 0.00% | 0.00% | 0.00% | 0.00% | 0.00% | 0.00% | 0.00% | 0.50% | 0.50% | 0.50% | 0.50% | 0.50% |
| **VAPOR** | | | | | | | | | | | | | | | | | | | | | |
| MOLAR FLOW RATE | lbmol/hr | 18,762 | 18,625 | 18,625 | 0 | 18,625 | 18,142 | 18,142 | 0 | 18,142 | 17,923.1 | - | 17,923.1 | - | 17,717.5 | - | 16,100.0 | 16,100.0 | 16,100.0 | 16,100.0 | 16,100.0 |
| MASS FLOW RATE | lb/hr | 798,595.3 | 796,133.6 | 796,133.6 | - | 796,133.6 | 787,411.1 | 787,411.1 | - | 787,411.1 | 783,445.9 | - | 783,445.9 | - | 779,741.9 | - | 709,961.7 | 709,961.7 | 709,961.7 | 709,961.7 | 709,961.7 |
| STD VOL. FLOW | MMSCFD | 170.88 | 169.64 | 169.64 | - | 169.64 | 165.24 | 165.24 | - | 165.24 | 163.24 | - | 163.24 | - | 161.37 | - | 146.64 | 146.64 | 146.64 | 146.64 | 146.64 |
| ACTUAL VOL. FLOW | ACFM | 100,846 | 46,889 | 46,889 | 0 | 25,393 | 20,739 | 20,739 | 0 | 11,239 | 8,805.74 | - | 8,805.74 | - | 8,954.83 | - | 6,724.32 | 7,859.53 | 20,119.63 | 20,119.63 | 72,397.86 |
| MOLECULAR WEIGHT | MW | 42.57 | 42.75 | 42.75 | - | 42.75 | 43.40 | 43.40 | - | 43.40 | 43.71 | - | 43.71 | - | 44.01 | - | 44.10 | 44.10 | 44.10 | 44.10 | 44.10 |
| DENSITY | lb/ft³ | 0.13 | 0.28 | 0.28 | - | 0.52 | 0.63 | 0.63 | - | 1.17 | 1.48 | - | 1.48 | - | 1.45 | - | 1.76 | 1.51 | 0.59 | 0.59 | 0.16 |
| VISCOSITY | cP | 0.0151 | 0.0155 | 0.0155 | - | 0.0201 | 0.0160 | 0.0160 | - | 0.0207 | 0.0164 | - | 0.0164 | - | 0.0165 | - | 0.0097 | 0.0118 | 0.0099 | 0.0099 | 0.0079 |
| **LIGHT LIQUID** | | | | | | | | | | | | | | | | | | | | | |
| MOLAR FLOW RATE | lbmol/hr | - | - | - | - | - | - | - | - | - | - | - | - | - | - | - | - | - | - | - | - |
| MASS FLOW RATE | lb/hr | - | - | - | - | - | - | - | - | - | - | - | - | - | - | - | - | - | - | - | - |
| STD VOL. FLOW | BPD | - | - | - | - | - | - | - | - | - | - | - | - | - | - | - | - | - | - | - | - |
| ACTUAL VOL. FLOW | GPM | - | - | - | - | - | - | - | - | - | - | - | - | - | - | - | - | - | - | - | - |
| DENSITY | lb/ft³ | - | - | - | - | - | - | - | - | - | - | - | - | - | - | - | - | - | - | - | - |
| MOLECULAR WEIGHT | MW | - | - | - | - | - | - | - | - | - | - | - | - | - | - | - | - | - | - | - | - |
| VISCOSITY | cP | - | - | - | - | - | - | - | - | - | - | - | - | - | - | - | - | - | - | - | - |
| SURFACE TENSION | Dyne/Cm | - | - | - | - | - | - | - | - | - | - | - | - | - | - | - | - | - | - | - | - |
| **HEAVY LIQUID** | | | | | | | | | | | | | | | | | | | | | |
| MOLAR FLOW RATE | lbmol/hr | - | 136.50 | 136.50 | - | 483.00 | - | 483.00 | - | 218.92 | 218.92 | - | 218.92 | - | 205.61 | - | 20,119.70 | - | - | - | - |
| MASS FLOW RATE | lb/hr | - | 2,461.7 | 2,461.7 | - | 8,722.4 | - | 8,722.4 | - | 3,965.2 | 3,965.2 | - | 3,965.2 | - | 3,704.0 | - | 362,458.5 | - | - | - | - |
| STD VOL. FLOW | BPD | - | 169 | 169 | - | 599 | - | 599 | - | 273 | 273 | - | 273 | - | 254 | - | 24,889 | - | - | - | - |
| ACTUAL VOL. FLOW | GPM | - | 4.98 | 4.98 | - | 17.64 | - | 17.64 | - | 8.01 | 8.01 | - | 8.01 | - | 7.49 | - | 774.31 | - | - | - | - |
| DENSITY | lb/ft³ | - | 61.63 | 61.63 | - | 61.66 | - | 61.66 | - | 61.72 | 61.72 | - | 61.72 | - | 61.64 | - | 58.36 | - | - | - | - |
| VISCOSITY | cP | - | 0.5291 | 0.5291 | - | 0.5651 | - | 0.5651 | - | 0.5621 | 0.5621 | - | 0.5621 | - | 0.5291 | - | 0.2394 | - | - | - | - |
| SURFACE TENSION | Dyne/Cm | - | 67.39 | 67.39 | - | 67.33 | - | 67.33 | - | 67.19 | 67.19 | - | 67.19 | - | 67.44 | - | 55.61 | - | - | - | - |

| No. | Date | By | REVISION |
|---|---|---|---|
| 90 | 7/17/2006 | LEG | |

NOTES:

ABB

Alstom Power
AEP Unit 5, Coneswille, OH
90% CO2 Recovery
Heat & Material Balance
90% 7T R2CTW80F

JOB NO: LR12965 REV. A

**Table 3-22: Case 1 Material & Energy Balance for $CO_2$ Compression, Dehydration, and Liquefaction (90% $CO_2$ Recovery), continued**

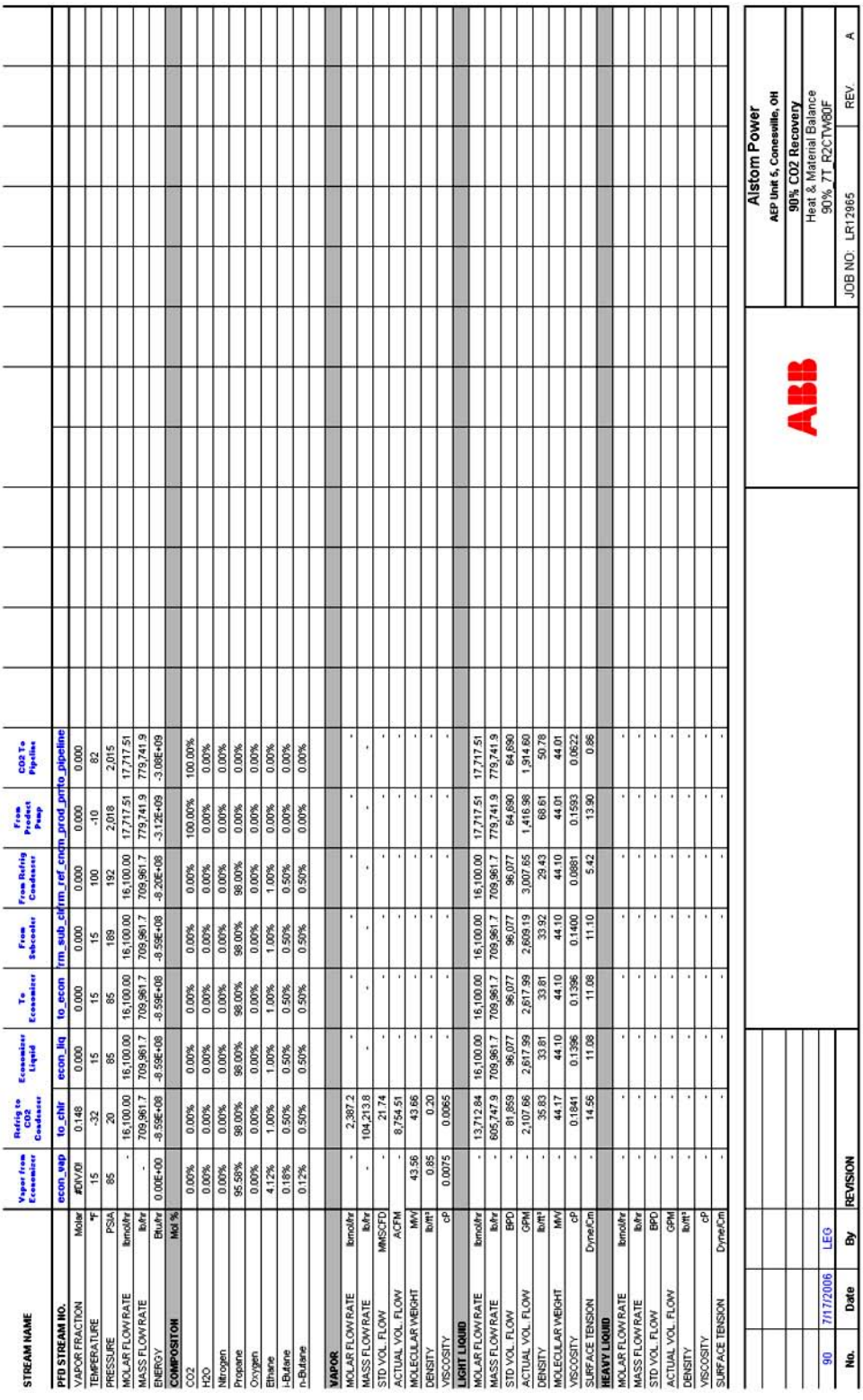

| STREAM NAME | | Vapor from Economizer | Refrig to CO2 Condenser | Economizer Liquid | To Economizer | From Subcooler | From Refrig Condenser | From Product Pump | CO2 To Pipeline |
|---|---|---|---|---|---|---|---|---|---|
| PFD STREAM NO. | | econ_vap | to_chlr | econ_liq | to_econ | trm_sub_cnfrm_ref_cndn | prod_prnto_pipeline | | |
| VAPOR FRACTION | Molar | #DIV/0! | 0.148 | 0.000 | 0.000 | 0.000 | 0.000 | 0.000 | 0.000 |
| TEMPERATURE | °F | 15 | -32 | 15 | 15 | 15 | 100 | -10 | 82 |
| PRESSURE | PSIA | 85 | 20 | 85 | 85 | 189 | 192 | 2,018 | 2,015 |
| MOLAR FLOW RATE | lbmol/hr | - | 16,100.00 | 16,100.00 | 16,100.00 | 16,100.00 | 16,100.00 | 17,717.51 | 17,717.51 |
| MASS FLOW RATE | lb/hr | - | 709,961.7 | 709,961.7 | 709,961.7 | 709,961.7 | 709,961.7 | 779,741.9 | 779,741.9 |
| ENERGY | Btu/hr | 0.00E+00 | -8.59E+08 | -8.59E+08 | -8.59E+08 | -8.59E+08 | -8.20E+08 | -3.12E+09 | -3.08E+09 |
| **COMPOSITION** | Mol % | | | | | | | | |
| CO2 | | 0.00% | 0.00% | 0.00% | 0.00% | 0.00% | 0.00% | 100.00% | 100.00% |
| H2O | | 0.00% | 0.00% | 0.00% | 0.00% | 0.00% | 0.00% | 0.00% | 0.00% |
| Nitrogen | | 0.00% | 0.00% | 0.00% | 0.00% | 0.00% | 0.00% | 0.00% | 0.00% |
| Propane | | 95.58% | 98.00% | 98.00% | 98.00% | 98.00% | 98.00% | 0.00% | 0.00% |
| Oxygen | | 0.00% | 0.00% | 0.00% | 0.00% | 0.00% | 0.00% | 0.00% | 0.00% |
| Ethane | | 4.12% | 1.00% | 1.00% | 1.00% | 1.00% | 1.00% | 0.00% | 0.00% |
| i-Butane | | 0.18% | 0.50% | 0.50% | 0.50% | 0.50% | 0.50% | 0.00% | 0.00% |
| n-Butane | | 0.12% | 0.50% | 0.50% | 0.50% | 0.50% | 0.50% | 0.00% | 0.00% |
| **VAPOR** | | | | | | | | | |
| MOLAR FLOW RATE | lbmol/hr | - | 2,387.2 | - | - | - | - | - | - |
| MASS FLOW RATE | lb/hr | - | 104,213.8 | - | - | - | - | - | - |
| STD VOL FLOW | MMSCFD | - | 21.74 | - | - | - | - | - | - |
| ACTUAL VOL FLOW | ACFM | - | 8,754.51 | - | - | - | - | - | - |
| MOLECULAR WEIGHT | MW | 43.56 | 43.66 | - | - | - | - | - | - |
| DENSITY | lb/ft³ | 0.85 | 0.20 | - | - | - | - | - | - |
| VISCOSITY | cP | 0.0075 | 0.0065 | - | - | - | - | - | - |
| **LIGHT LIQUID** | | | | | | | | | |
| MOLAR FLOW RATE | lbmol/hr | - | 13,712.84 | 16,100.00 | 16,100.00 | 16,100.00 | 16,100.00 | 17,717.51 | 17,717.51 |
| MASS FLOW RATE | lb/hr | - | 605,747.9 | 709,961.7 | 709,961.7 | 709,961.7 | 709,961.7 | 779,741.9 | 779,741.9 |
| STD VOL FLOW | BPD | - | 81,859 | 96,077 | 96,077 | 96,077 | 96,077 | 64,690 | 64,690 |
| ACTUAL VOL FLOW | GPM | - | 2,107.66 | 2,617.99 | 2,617.99 | 2,609.19 | 3,007.65 | 1,416.98 | 1,914.60 |
| DENSITY | lb/ft³ | - | 35.83 | 33.81 | 33.81 | 33.92 | 29.43 | 68.61 | 50.78 |
| MOLECULAR WEIGHT | MW | - | 44.17 | 44.10 | 44.10 | 44.10 | 44.10 | 44.01 | 44.01 |
| VISCOSITY | cP | - | 0.1841 | 0.1396 | 0.1396 | 0.1400 | 0.0881 | 0.1593 | 0.0622 |
| SURFACE TENSION | Dyne/Cm | - | 14.56 | 11.08 | 11.08 | 11.10 | 5.42 | 13.90 | 0.85 |
| **HEAVY LIQUID** | | | | | | | | | |
| MOLAR FLOW RATE | lbmol/hr | - | - | - | - | - | - | - | - |
| MASS FLOW RATE | lb/hr | - | - | - | - | - | - | - | - |
| STD VOL FLOW | BPD | - | - | - | - | - | - | - | - |
| ACTUAL VOL FLOW | GPM | - | - | - | - | - | - | - | - |
| DENSITY | lb/ft³ | - | - | - | - | - | - | - | - |
| VISCOSITY | cP | - | - | - | - | - | - | - | - |
| SURFACE TENSION | Dyne/Cm | - | - | - | - | - | - | - | - |

| No. | Date | By | REVISION |
|---|---|---|---|
| 90 | 7/17/2006 | LEG | |

ABB

Alstom Power
AEP Unit 5, Conesville, OH
90% CO2 Recovery
Heat & Material Balance
90%_7T_R2CTW80F
JOB NO: LR12965 REV. A

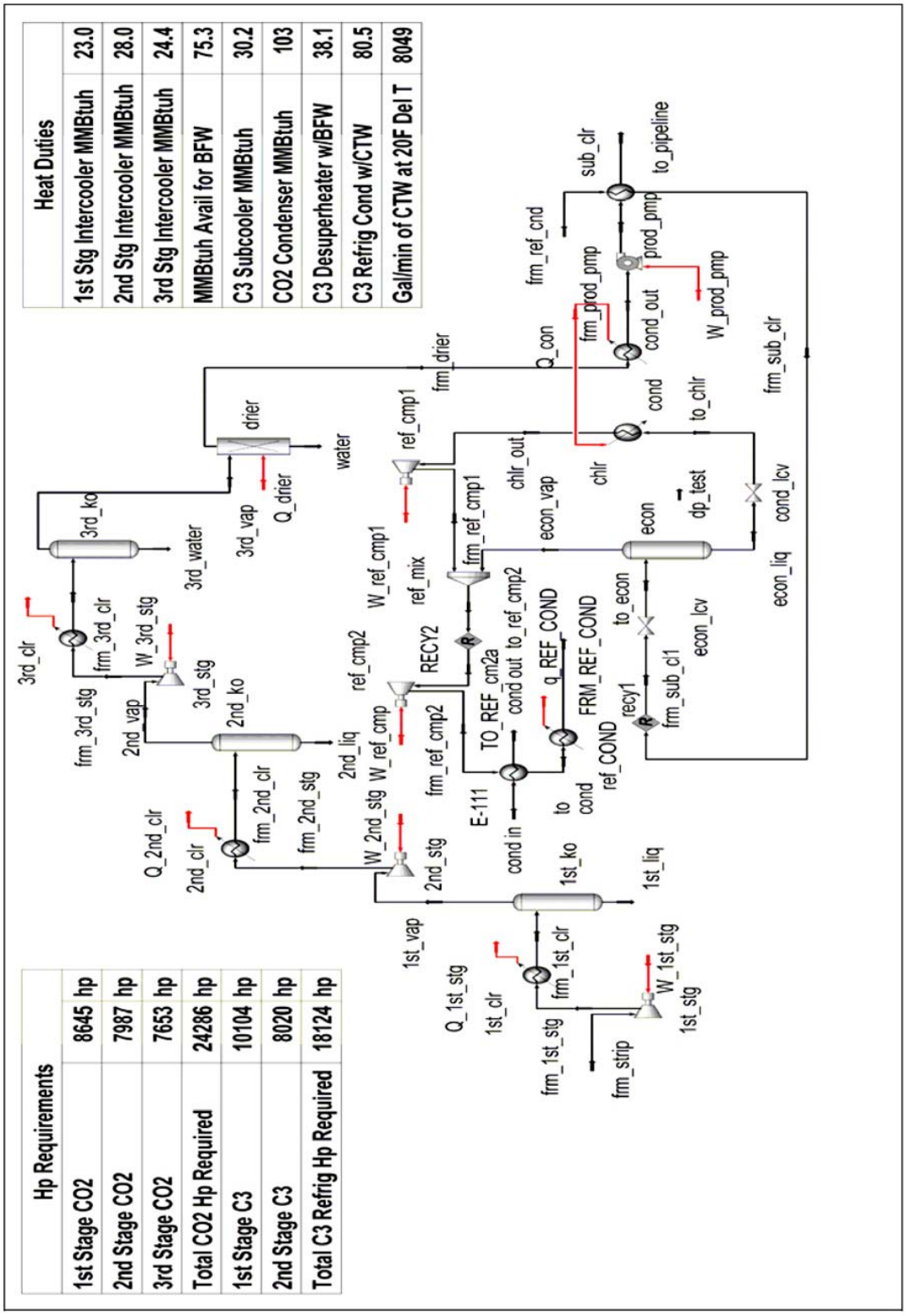


**Figure 3-9: Case 2 $CO_2$ Compression, Dehydration, and Liquefaction Schematic (70% $CO_2$ Recovery)**

**Table 3-23: Case 2 Material and Energy Balance for $CO_2$ Compression, Dehydration, and Liquefaction (70% $CO_2$ Recovery)**

| STREAM NAME | | Total Acid Gas from Strippers | First Stage Discharge | To Second Stage | First Stage Water KO | From Second Stage | 2nd Stage Discharge | To 3rd Stage | 2nd Stage Water KO | From 3rd Stage | From 3rd Stage Cooler | 3rd Stage Water KO | To Drier | Water From Drier | From Drier To Condenser | Condensed CO2 Product | Frm C3 Decanpcsser or ETH | Refrig Compressor Discharge | Section of 2nd Refrig Compressor | Discharge from 1st Refrig Compr | Refrig from CO2 Condenser |
|---|---|---|---|---|---|---|---|---|---|---|---|---|---|---|---|---|---|---|---|---|---|
| PFD STREAM NO. | | frm_strip | frm_1st_dlr | 1st_vap | 1st_liq | frm_2nd_st | frm_2nd_dlr | 2nd_vap | 2nd_liq | frm_3rd_st | frm_3rd_dlr | 3rd_water | 3rd_vap | water | frm_drier | cond out | to cond | m_ref_cmp | o_ref_cmp | m_ref_cmp | chlr_out |
| VAPOR FRACTION | Molar | 1.000 | 0.993 | 1.000 | 0.000 | 1.000 | 0.974 | 1.000 | 0.000 | 1.000 | 0.988 | 0.000 | 1.000 | 0.000 | 1.000 | 0.000 | 1.000 | 1.000 | 1.000 | 1.000 | 1.000 |
| TEMPERATURE | °F | 115.0 | 125 | 125 | 125 | 275 | 125 | 125 | 125 | 275 | 125 | 125 | 125 | 125 | 125 | 205 | 125 | 264 | 173 | 173 | 56 |
| PRESSURE | PSIA | 19.0 | 41 | 41 | 41 | 95 | 89 | 89 | 89 | 206 | 200 | 200 | 200 | 195 | 195 | 95 | 199 | 234 | 85 | 85 | 20 |
| MOLAR FLOW RATE | lbmol/hr | 14,575 | 14,575 | 14,469 | 106.04 | 14,469 | 14,469 | 14,093.74 | 375 | 14,094 | 14,093.74 | 170.07 | 13,923.68 | 159.73 | 13,763.95 | 21,526.53 | 12,522.00 | 12,522.00 | 12,522.00 | 12,522.00 | 12,522.00 |
| MASS FLOW RATE | lb/hr | 620,393.5 | 620,393.5 | 618,481.1 | 1,912.4 | 618,481.1 | 618,481.1 | 611,705.0 | 6,776.1 | 611,705.0 | 611,705.0 | 3,080.4 | 608,624.6 | 2,877.5 | 605,747.1 | 387,802.7 | 552,182.6 | 552,182.6 | 552,182.6 | 552,182.6 | 552,182.6 |
| ENERGY | Btu/hr | -2.41E+09 | -2.41E+09 | -2.40E+09 | -1.29E+07 | -2.39E+09 | -2.41E+09 | -2.36E+09 | -4.57E+07 | -2.34E+09 | -2.39E+09 | -2.07E+07 | -2.34E+09 | -1.95E+07 | -2.33E+09 | -2.59E+09 | -5.57E+08 | -5.19E+08 | -5.40E+08 | -5.40E+08 | -5.65E+08 |
| **COMPOSITION** | Mol % | | | | | | | | | | | | | | | | | | | | |
| CO2 | | 94.44% | 94.44% | 95.14% | 0.06% | 95.14% | 95.14% | 97.66% | 0.17% | 97.66% | 97.66% | 0.36% | 96.85% | 0.00% | 100.00% | 0.00% | 0.00% | 0.00% | 0.00% | 0.00% | 0.00% |
| H2O | | 5.56% | 5.56% | 4.86% | 99.92% | 4.86% | 4.86% | 2.34% | 99.83% | 2.34% | 2.34% | 99.62% | 1.15% | 100.00% | 0.00% | 100.00% | 0.00% | 0.00% | 0.00% | 0.00% | 0.00% |
| Nitrogen | | 0.00% | 0.00% | 0.00% | 0.00% | 0.00% | 0.00% | 0.00% | 0.00% | 0.00% | 0.00% | 0.00% | 0.00% | 0.00% | 0.00% | 0.00% | 0.00% | 0.00% | 0.00% | 0.00% | 0.00% |
| Propane | | 0.00% | 0.00% | 0.00% | 0.00% | 0.00% | 0.00% | 0.00% | 0.00% | 0.00% | 0.00% | 0.00% | 0.00% | 0.00% | 0.00% | 0.00% | 98.00% | 98.00% | 98.00% | 98.00% | 98.00% |
| Oxygen | | 0.00% | 0.00% | 0.00% | 0.00% | 0.00% | 0.00% | 0.00% | 0.00% | 0.00% | 0.00% | 0.00% | 0.00% | 0.00% | 0.00% | 0.00% | 0.00% | 0.00% | 0.00% | 0.00% | 0.00% |
| Ethane | | 0.00% | 0.00% | 0.00% | 0.00% | 0.00% | 0.00% | 0.00% | 0.00% | 0.00% | 0.00% | 0.00% | 0.00% | 0.00% | 0.00% | 0.00% | 1.00% | 1.00% | 1.00% | 1.00% | 1.00% |
| i-Butane | | 0.00% | 0.00% | 0.00% | 0.00% | 0.00% | 0.00% | 0.00% | 0.00% | 0.00% | 0.00% | 0.00% | 0.00% | 0.00% | 0.00% | 0.00% | 0.50% | 0.50% | 0.50% | 0.50% | 0.50% |
| n-Butane | | 0.00% | 0.00% | 0.00% | 0.00% | 0.00% | 0.00% | 0.00% | 0.00% | 0.00% | 0.00% | 0.00% | 0.00% | 0.00% | 0.00% | 0.00% | 0.50% | 0.50% | 0.50% | 0.50% | 0.50% |
| **VAPOR** | | | | | | | | | | | | | | | | | | | | | |
| MOLAR FLOW RATE | lbmol/hr | 14,575 | 14,469 | 14,469 | 0 | 14,469 | 14,094 | 14,094 | 0 | 14,094 | 13,923.7 | - | 13,923.7 | - | 13,764.0 | - | 12,522.0 | 12,522.0 | 12,522.0 | 12,522.0 | 12,522.0 |
| MASS FLOW RATE | lb/hr | 620,393.5 | 618,481.1 | 618,481.1 | - | 618,481.1 | 611,705.0 | 611,705.0 | - | 611,705.0 | 608,624.6 | - | 608,624.6 | - | 605,747.1 | - | 552,182.6 | 552,182.6 | 552,182.6 | 552,182.6 | 552,182.6 |
| STD VOL FLOW | MMSCFD | 132.75 | 131.78 | 131.78 | - | 131.78 | 128.37 | 128.37 | - | 128.37 | 126.82 | - | 126.82 | - | 125.36 | - | 114.05 | 114.05 | 114.05 | 114.05 | 114.05 |
| ACTUAL VOL FLOW | ACFM | 78,342 | 36,426 | 36,426 | 0 | 19,726 | 16,112 | 16,112 | 0 | 8,731 | 6,840.79 | - | 6,840.79 | - | 6,956.61 | - | 5,229.93 | 6,107.89 | 15,636.40 | 15,636.40 | 56,255.60 |
| MOLECULAR WEIGHT | MW | 42.57 | 42.75 | 42.75 | - | 42.75 | 43.40 | 43.40 | - | 43.40 | 43.71 | - | 43.71 | - | 44.01 | - | 44.10 | 44.10 | 44.10 | 44.10 | 44.10 |
| DENSITY | lb/ft³ | 0.13 | 0.28 | 0.28 | - | 0.52 | 0.63 | 0.63 | - | 1.17 | 1.48 | - | 1.48 | - | 1.45 | - | 1.76 | 1.51 | 0.59 | 0.59 | 0.16 |
| VISCOSITY | cP | 0.0151 | 0.0155 | 0.0155 | - | 0.0201 | 0.0160 | 0.0160 | - | 0.0207 | 0.0164 | - | 0.0164 | - | 0.0165 | - | 0.0097 | 0.0118 | 0.0099 | 0.0099 | 0.0079 |
| **LIGHT LIQUID** | | | | | | | | | | | | | | | | | | | | | |
| MOLAR FLOW RATE | lbmol/hr | - | - | - | - | - | - | - | - | - | - | - | - | - | - | - | - | - | - | - | - |
| MASS FLOW RATE | lb/hr | - | - | - | - | - | - | - | - | - | - | - | - | - | - | - | - | - | - | - | - |
| STD VOL FLOW | BPD | - | - | - | - | - | - | - | - | - | - | - | - | - | - | - | - | - | - | - | - |
| ACTUAL VOL FLOW | GPM | - | - | - | - | - | - | - | - | - | - | - | - | - | - | - | - | - | - | - | - |
| DENSITY | lb/ft³ | - | - | - | - | - | - | - | - | - | - | - | - | - | - | - | - | - | - | - | - |
| MOLECULAR WEIGHT | MW | - | - | - | - | - | - | - | - | - | - | - | - | - | - | - | - | - | - | - | - |
| VISCOSITY | cP | - | - | - | - | - | - | - | - | - | - | - | - | - | - | - | - | - | - | - | - |
| SURFACE TENSION | Dyne/Cm | - | - | - | - | - | - | - | - | - | - | - | - | - | - | - | - | - | - | - | - |
| **HEAVY LIQUID** | | | | | | | | | | | | | | | | | | | | | |
| MOLAR FLOW RATE | lbmol/hr | - | 106.04 | - | 106.04 | - | 375.22 | - | 375.22 | - | 170.07 | 170.07 | - | 159.73 | - | 21,526.53 | - | - | - | - | - |
| MASS FLOW RATE | lb/hr | - | 1,912.4 | - | 1,912.4 | - | 6,776.1 | - | 6,776.1 | - | 3,080.4 | 3,080.4 | - | 2,877.5 | - | 387,802.7 | - | - | - | - | - |
| STD VOL FLOW | BPD | - | 131 | - | 131 | - | 465 | - | 465 | - | 212 | 212 | - | 197 | - | 26,608 | - | - | - | - | - |
| ACTUAL VOL FLOW | GPM | - | 3.87 | - | 3.87 | - | 13.70 | - | 13.70 | - | 6.22 | 6.22 | - | 5.82 | - | 813.90 | - | - | - | - | - |
| DENSITY | lb/ft³ | - | 61.63 | - | 61.63 | - | 61.66 | - | 61.66 | - | 61.72 | 61.72 | - | 61.63 | - | 59.40 | - | - | - | - | - |
| VISCOSITY | cP | - | 0.5291 | - | 0.5291 | - | 0.5651 | - | 0.5651 | - | 0.5621 | 0.5621 | - | 0.5282 | - | 0.2915 | - | - | - | - | - |
| SURFACE TENSION | Dyne/Cm | - | 67.39 | - | 67.39 | - | 67.33 | - | 67.33 | - | 67.19 | 67.19 | - | 67.42 | - | 59.38 | - | - | - | - | - |

| No. | Date | By | REVISION |
|---|---|---|---|
| 90 | 7/17/2006 | LEG | |

NOTES:

ABB

Alstom Power
AEP Unit 5, Conesville, OH
70% CO2 Recovery
Heat & Material Balance
70% 5T_R2CTWBD
JOB NO: LR12965 REV. A

**Table 3-23: Case 2 Material and Energy Balance for $CO_2$ Compression, Dehydration, and Liquefaction (70% $CO_2$ Recovery), continued**

| STREAM NAME | | Vapor from Economizer | Refrig to CO2 Condenser | Economizer Liquid | To Economizer | From Subcooler | From Refrig Condenser | From Product Pump | CO2 To Pipeline |
|---|---|---|---|---|---|---|---|---|---|
| PFD STREAM NO. | | econ_vap | to_chlr | econ_liq | to_econ | frm_sub_chlr | frm_ref_cndn | prod_pmp | to_pipeline |
| VAPOR FRACTION | Molar | #DIV/0! | 0.149 | 0.000 | 0.000 | 0.000 | 0.000 | 0.000 | 0.000 |
| TEMPERATURE | °F | 16 | -32 | 16 | 16 | 15 | 100 | -10 | 82 |
| PRESSURE | PSIA | 85 | 20 | 85 | 85 | 199 | 192 | 2,018 | 2,015 |
| MOLAR FLOW RATE | lbmol/hr | - | 12,522.00 | 12,522.00 | 12,522.00 | 12,522.00 | 12,522.00 | 13,763.95 | 13,763.95 |
| MASS FLOW RATE | lb/hr | - | 552,182.6 | 552,182.6 | 552,182.6 | 552,182.6 | 552,182.6 | 605,747.1 | 605,747.1 |
| ENERGY | Btu/hr | 0.00E+00 | -6.68E+08 | -6.68E+08 | -6.68E+08 | -6.68E+08 | -6.38E+08 | -2.43E+09 | -2.40E+09 |
| **COMPOSITION** | Mol % | | | | | | | | |
| CO2 | | 0.00% | 0.00% | 0.00% | 0.00% | 0.00% | 0.00% | 100.00% | 100.00% |
| H2O | | 0.00% | 0.00% | 0.00% | 0.00% | 0.00% | 0.00% | 0.00% | 0.00% |
| Nitrogen | | 0.00% | 0.00% | 0.00% | 0.00% | 0.00% | 0.00% | 0.00% | 0.00% |
| Propane | | 95.59% | 98.00% | 98.00% | 98.00% | 98.00% | 98.00% | 0.00% | 0.00% |
| Oxygen | | 0.00% | 0.00% | 0.00% | 0.00% | 0.00% | 0.00% | 0.00% | 0.00% |
| Ethane | | 4.12% | 1.00% | 1.00% | 1.00% | 1.00% | 1.00% | 0.00% | 0.00% |
| i-Butane | | 0.18% | 0.50% | 0.50% | 0.50% | 0.50% | 0.50% | 0.00% | 0.00% |
| n-Butane | | 0.12% | 0.50% | 0.50% | 0.50% | 0.50% | 0.50% | 0.00% | 0.00% |
| **VAPOR** | | | | | | | | | |
| MOLAR FLOW RATE | lbmol/hr | - | 1,861.1 | - | - | - | - | - | - |
| MASS FLOW RATE | lb/hr | - | 81,247.7 | - | - | - | - | - | - |
| STD VOL FLOW | MMSCFD | - | 16.95 | - | - | - | - | - | - |
| ACTUAL VOL FLOW | ACFM | - | 6,825.18 | - | - | - | - | - | - |
| MOLECULAR WEIGHT | MW | 43.56 | 43.66 | - | - | - | - | - | - |
| DENSITY | lb/ft³ | 0.85 | 0.20 | - | - | - | - | - | - |
| VISCOSITY | cP | 0.0075 | 0.0065 | - | - | - | - | - | - |
| **LIGHT LIQUID** | | | | | | | | | |
| MOLAR FLOW RATE | lbmol/hr | - | 10,660.93 | 12,522.00 | 12,522.00 | 12,522.00 | 12,522.00 | 13,763.95 | 13,763.95 |
| MASS FLOW RATE | lb/hr | - | 470,934.9 | 552,182.6 | 552,182.6 | 552,182.6 | 552,182.6 | 605,747.1 | 605,747.1 |
| STD VOL FLOW | BPD | - | 63,641 | 74,725 | 74,725 | 74,725 | 74,725 | 50,255 | 50,255 |
| ACTUAL VOL FLOW | GPM | - | 1,638.59 | 2,036.48 | 2,036.48 | 2,029.63 | 2,339.24 | 1,100.79 | 1,487.37 |
| DENSITY | lb/ft³ | - | 35.83 | 33.81 | 33.81 | 33.92 | 29.43 | 68.61 | 50.78 |
| MOLECULAR WEIGHT | MW | - | 44.17 | 44.10 | 44.10 | 44.10 | 44.10 | 44.01 | 44.01 |
| VISCOSITY | cP | - | 0.1841 | 0.1395 | 0.1395 | 0.1400 | 0.0881 | 0.1593 | 0.0622 |
| SURFACE TENSION | Dyne/Cm | - | 14.56 | 11.06 | 11.08 | 11.09 | 5.42 | 13.90 | 0.86 |
| **HEAVY LIQUID** | | | | | | | | | |
| MOLAR FLOW RATE | lbmol/hr | - | 0.00 | - | - | - | - | - | - |
| MASS FLOW RATE | lb/hr | - | - | - | - | - | - | - | - |
| STD VOL FLOW | BPD | - | - | - | - | - | - | - | - |
| ACTUAL VOL FLOW | GPM | - | - | - | - | - | - | - | - |
| DENSITY | lb/ft³ | - | - | - | - | - | - | - | - |
| VISCOSITY | cP | - | - | - | - | - | - | - | - |
| SURFACE TENSION | Dyne/Cm | - | - | - | - | - | - | - | - |

| No. | Date | By | REVISION |
|---|---|---|---|
| 90 | 7/17/2006 | LEG | |

ABB

Alstom Power
AEP Unit 5, Conesville, OH
70% CO2 Recovery
Heat & Material Balance
70%_5T_R2CTW60
JOB NO: LR12965 REV: A

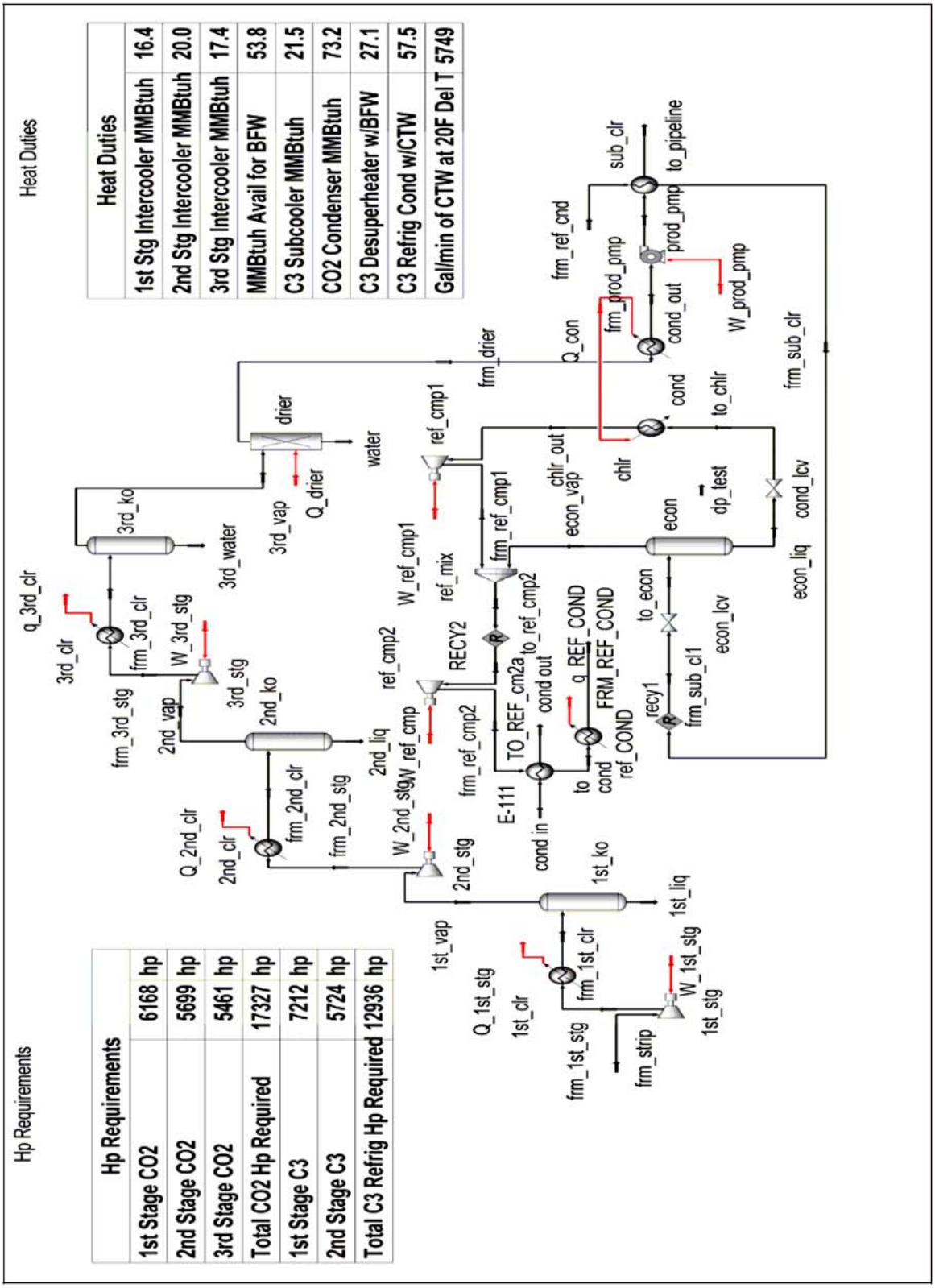


**Figure 3-10: Case 3 $CO_2$ Compression, Dehydration, and Liquefaction Schematic (50% $CO_2$ Recovery)**

**Table 3-24: Case 3 Material and Energy Balance for $CO_2$ Compression, Dehydration, and Liquefaction (50% $CO_2$ Recovery)**

| STREAM NAME | | Total Acid Gas from Stripper | First Stage Discharge | To Second Stage | First Stage Vapor 60 | First Stage Liq | From Second Stage | 2nd Stage Discharge | To 3rd Stage | 2nd Stage Vapor 60 | 2nd Stage Liq | From 3rd Stage | From 3rd Stage Cooler | 3rd Stage Vapor 60 | To Drier | Water From Drier | From Drier To Condenser | Condensed CO2 Product | From C3 Recuperheate r, ETH | Refrig Compressor Discharge | Section of 2nd Refrig Compressor | Discharge from 1st Refrig Compr | Refrig from CO2 Condenser |
|---|---|---|---|---|---|---|---|---|---|---|---|---|---|---|---|---|---|---|---|---|---|---|---|
| PFD STREAM NO. | | frm_strip | frm_1st_dir | 1st_vap | 1st_liq | frm_2nd_stg | frm_2nd_dir | 2nd_vap | frm_3rd_stg | 2nd_liq | frm_3rd_dir | 3rd_vap | 3rd_water | to_cond | water | frm_drier | cond out | to cond | frm_ref_cmp | to_ref_cmp2 | frm_ref_cmp | chlr_out |
| VAPOR FRACTION | Molar | 1.000 | 0.993 | 1.000 | 0.000 | 1.000 | 0.974 | 1.000 | 1.000 | 0.000 | 0.988 | 1.000 | 0.000 | 1.000 | 0.000 | 1.000 | 0.000 | 1.000 | 1.000 | 1.000 | 1.000 | 1.000 | 1.000 |
| TEMPERATURE | °F | 115.0 | 125 | 125 | 125 | 275 | 125 | 125 | 275 | 125 | 125 | 125 | 125 | 125 | 125 | 125 | 205 | 125 | 263 | 173 | 173 | 173 | 56 |
| PRESSURE | PSIA | 19.0 | 41 | 41 | 41 | 95 | 89 | 89 | 206 | 89 | 200 | 200 | 200 | 200 | 195 | 195 | 95 | 199 | 234 | 85 | 85 | 85 | 20 |
| MOLAR FLOW RATE | lbmol/hr | 10,399 | 10,399 | 10,323 | 75.66 | 10,323 | 10,323 | 10,055.63 | 10,056 | 268 | 10,055.63 | 9,934.29 | 121.34 | 9,934.29 | 113.96 | 9,820.33 | 15,337.83 | 8,944.00 | 8,944.00 | 8,944.00 | 8,944.00 | 8,944.00 | 8,944.00 |
| MASS FLOW RATE | lb/hr | 442,639.6 | 442,639.6 | 441,275.1 | 1,364.5 | 441,275.1 | 441,275.1 | 436,440.5 | 436,440.5 | 4,834.6 | 436,440.5 | 434,242.7 | 2,197.8 | 434,242.7 | 2,053.0 | 432,189.7 | 276,312.6 | 394,403.6 | 394,403.6 | 394,403.6 | 394,403.6 | 394,403.6 | 394,403.6 |
| ENERGY | Btu/hr | -1.72E+09 | -1.72E+09 | -1.71E+09 | -9.22E+06 | -1.70E+09 | -1.72E+09 | -1.68E+09 | -1.67E+09 | -3.26E+07 | -1.69E+09 | -1.67E+09 | -1.48E+07 | -1.67E+09 | -1.39E+07 | -1.66E+09 | -1.85E+09 | -3.99E+08 | -3.71E+08 | -3.85E+08 | -3.85E+08 | -3.85E+08 | -4.04E+08 |
| COMPOSITION | Mol % | | | | | | | | | | | | | | | | | | | | | | |
| CO2 | | 94.44% | 94.44% | 95.14% | 0.08% | 95.14% | 95.14% | 97.66% | 97.66% | 0.17% | 97.66% | 98.65% | 0.39% | 98.65% | 0.00% | 100.00% | 0.00% | 0.00% | 0.00% | 0.00% | 0.00% | 0.00% | 0.00% |
| H2O | | 5.56% | 5.56% | 4.86% | 99.92% | 4.86% | 4.86% | 2.34% | 2.34% | 99.83% | 2.34% | 1.15% | 99.62% | 1.15% | 100.00% | 0.00% | 100.00% | 0.00% | 0.00% | 0.00% | 0.00% | 0.00% | 0.00% |
| Nitrogen | | 0.00% | 0.00% | 0.00% | 0.00% | 0.00% | 0.00% | 0.00% | 0.00% | 0.00% | 0.00% | 0.00% | 0.00% | 0.00% | 0.00% | 0.00% | 0.00% | 0.00% | 0.00% | 0.00% | 0.00% | 0.00% | 0.00% |
| Propane | | 0.00% | 0.00% | 0.00% | 0.00% | 0.00% | 0.00% | 0.00% | 0.00% | 0.00% | 0.00% | 0.00% | 0.00% | 0.00% | 0.00% | 0.00% | 0.00% | 98.00% | 98.00% | 98.00% | 98.00% | 98.00% | 98.00% |
| Oxygen | | 0.00% | 0.00% | 0.00% | 0.00% | 0.00% | 0.00% | 0.00% | 0.00% | 0.00% | 0.00% | 0.00% | 0.00% | 0.00% | 0.00% | 0.00% | 0.00% | 0.00% | 0.00% | 0.00% | 0.00% | 0.00% | 0.00% |
| Ethane | | 0.00% | 0.00% | 0.00% | 0.00% | 0.00% | 0.00% | 0.00% | 0.00% | 0.00% | 0.00% | 0.00% | 0.00% | 0.00% | 0.00% | 0.00% | 0.00% | 1.00% | 1.00% | 1.00% | 1.00% | 1.00% | 1.00% |
| i-Butane | | 0.00% | 0.00% | 0.00% | 0.00% | 0.00% | 0.00% | 0.00% | 0.00% | 0.00% | 0.00% | 0.00% | 0.00% | 0.00% | 0.00% | 0.00% | 0.00% | 0.50% | 0.50% | 0.50% | 0.50% | 0.50% | 0.50% |
| n-Butane | | 0.00% | 0.00% | 0.00% | 0.00% | 0.00% | 0.00% | 0.00% | 0.00% | 0.00% | 0.00% | 0.00% | 0.00% | 0.00% | 0.00% | 0.00% | 0.00% | 0.50% | 0.50% | 0.50% | 0.50% | 0.50% | 0.50% |
| VAPOR | | | | | | | | | | | | | | | | | | | | | | | |
| MOLAR FLOW RATE | lbmol/hr | 10,399 | 10,323 | 10,323 | 0 | 10,323 | 10,056 | 10,056 | 10,056 | 0 | 10,056 | 9,934.3 | - | 9,934.3 | - | 9,820.3 | - | 8,944.0 | 8,944.0 | 8,944.0 | 8,944.0 | 8,944.0 | 8,944.0 |
| MASS FLOW RATE | lb/hr | 442,639.6 | 441,275.1 | 441,275.1 | - | 441,275.1 | 436,440.5 | 436,440.5 | 436,440.5 | - | 436,440.5 | 434,242.7 | - | 434,242.7 | - | 432,189.7 | - | 394,403.6 | 394,403.6 | 394,403.6 | 394,403.6 | 394,403.6 | 394,403.6 |
| STD VOL FLOW | MMSCFD | 94.71 | 94.03 | 94.03 | - | 94.03 | 91.59 | 91.59 | 91.59 | - | 91.59 | 90.48 | - | 90.48 | - | 89.44 | - | 81.46 | 81.46 | 81.46 | 81.46 | 81.46 | 81.46 |
| ACTUAL VOL FLOW | ACFM | 55,896 | 25,989 | 25,989 | 0 | 14,074 | 11,495 | 11,495 | 11,495 | 0 | 6,230 | 4,880.78 | - | 4,880.78 | - | 4,963.42 | - | 3,735.54 | 4,359.32 | 11,160.53 | 11,160.53 | 11,160.53 | 40,151.15 |
| MOLECULAR WEIGHT | MW | 42.57 | 42.75 | 42.75 | - | 42.75 | 43.40 | 43.40 | 43.40 | - | 43.40 | 43.71 | - | 43.71 | - | 44.01 | - | 44.10 | 44.10 | 44.10 | 44.10 | 44.10 | 44.10 |
| DENSITY | lb/ft³ | 0.13 | 0.28 | 0.28 | - | 0.52 | 0.63 | 0.63 | 0.63 | - | 1.17 | 1.48 | - | 1.48 | - | 1.45 | - | 1.76 | 1.51 | 0.59 | 0.59 | 0.59 | 0.16 |
| VISCOSITY | cP | 0.0151 | 0.0155 | 0.0155 | - | 0.0201 | 0.0160 | 0.0160 | 0.0160 | - | 0.0207 | 0.0164 | - | 0.0164 | - | 0.0165 | - | 0.0097 | 0.0118 | 0.0099 | 0.0099 | 0.0099 | 0.0079 |
| LIGHT LIQUID | | | | | | | | | | | | | | | | | | | | | | | |
| MOLAR FLOW RATE | lbmol/hr | - | - | - | - | - | - | - | - | - | - | - | - | - | - | - | - | - | - | - | - | - | - |
| MASS FLOW RATE | lb/hr | - | - | - | - | - | - | - | - | - | - | - | - | - | - | - | - | - | - | - | - | - | - |
| STD VOL FLOW | BPD | - | - | - | - | - | - | - | - | - | - | - | - | - | - | - | - | - | - | - | - | - | - |
| ACTUAL VOL FLOW | GPM | - | - | - | - | - | - | - | - | - | - | - | - | - | - | - | - | - | - | - | - | - | - |
| DENSITY | lb/ft³ | - | - | - | - | - | - | - | - | - | - | - | - | - | - | - | - | - | - | - | - | - | - |
| MOLECULAR WEIGHT | MW | - | - | - | - | - | - | - | - | - | - | - | - | - | - | - | - | - | - | - | - | - | - |
| VISCOSITY | cP | - | - | - | - | - | - | - | - | - | - | - | - | - | - | - | - | - | - | - | - | - | - |
| SURFACE TENSION | Dyne/Cm | - | - | - | - | - | - | - | - | - | - | - | - | - | - | - | - | - | - | - | - | - | - |
| HEAVY LIQUID | | | | | | | | | | | | | | | | | | | | | | | |
| MOLAR FLOW RATE | lbmol/hr | - | 75.66 | - | 75.66 | - | 267.71 | - | 121.34 | - | 121.34 | 121.34 | - | 113.96 | - | 15,337.83 | - | - | - | - | - | - | - |
| MASS FLOW RATE | lb/hr | - | 1,364.5 | - | 1,364.5 | - | 4,834.6 | - | 2,197.8 | - | 2,197.8 | 2,197.8 | - | 2,053.0 | - | 276,312.6 | - | - | - | - | - | - | - |
| STD VOL FLOW | BPD | - | 94 | - | 94 | - | 332 | - | 151 | - | 151 | 151 | - | 141 | - | 18,958 | - | - | - | - | - | - | - |
| ACTUAL VOL FLOW | GPM | - | 2.76 | - | 2.76 | - | 9.78 | - | 4.44 | - | 4.44 | 4.44 | - | 4.15 | - | 579.90 | - | - | - | - | - | - | - |
| DENSITY | lb/ft³ | - | 61.63 | - | 61.63 | - | 61.66 | - | 61.72 | - | 61.72 | 61.72 | - | 61.65 | - | 59.41 | - | - | - | - | - | - | - |
| VISCOSITY | cP | - | 0.5291 | - | 0.5291 | - | 0.5651 | - | 0.5621 | - | 0.5621 | 0.5621 | - | 0.5311 | - | 0.2916 | - | - | - | - | - | - | - |
| SURFACE TENSION | Dyne/Cm | - | 67.39 | - | 67.39 | - | 67.33 | - | 67.19 | - | 67.19 | 67.19 | - | 67.48 | - | 59.39 | - | - | - | - | - | - | - |

| No. | Date | By | REVISION |
|---|---|---|---|
| | | | |
| | | | |
| | | | |
| 90 | 7/17/2006 | LEG | |

NOTES:

ABB

Alstom Power
AEP Unit 5, Conesville, OH
50% CO2 Recovery
Heat & Material Balance
50%_4T_R2CTWB0

JOB NO: LR12965 REV: A

**Table 3-24: Case 3 Material and Energy Balance for $CO_2$ Compression, Dehydration, and Liquefaction (50% $CO_2$ Recovery), continued**

| STREAM NAME | | Vapor from Economizer | Refrig to CO2 Condenser | Economizer Liquid | To Economizer | From Subcooler | From Refrig Condenser | From Product Pump | CO2 To Pipeline |
|---|---|---|---|---|---|---|---|---|---|
| PFD STREAM NO. | | econ_vap | to_chlr | econ_liq | to_econ | frm_sub_clr | frm_ref_cndn | frm_prod_pmp | to_pipeline |
| VAPOR FRACTION | Mole | #DIV/0! | 0.149 | 0.000 | 0.000 | 0.000 | 0.000 | 0.000 | 0.000 |
| TEMPERATURE | °F | 16 | -32 | 16 | 16 | 15 | 100 | -10 | 82 |
| PRESSURE | PSIA | 85 | 20 | 85 | 85 | 189 | 192 | 2,018 | 2,015 |
| MOLAR FLOW RATE | lbmol/hr | - | 8,944.00 | 8,944.00 | 8,944.00 | 8,944.00 | 8,944.00 | 9,820.33 | 9,820.33 |
| MASS FLOW RATE | lb/hr | - | 394,403.6 | 394,403.6 | 394,403.6 | 394,403.6 | 394,403.6 | 432,189.7 | 432,189.7 |
| ENERGY | Btu/hr | 0.00E+00 | -4.77E+08 | -4.77E+08 | -4.77E+08 | -4.77E+08 | -4.55E+08 | -1.73E+09 | -1.71E+09 |
| COMPOSITION | Mol % | | | | | | | | |
| CO2 | | 0.00% | 0.00% | 0.00% | 0.00% | 0.00% | 0.00% | 100.00% | 100.00% |
| H2O | | 0.00% | 0.00% | 0.00% | 0.00% | 0.00% | 0.00% | 0.00% | 0.00% |
| Nitrogen | | 0.00% | 0.00% | 0.00% | 0.00% | 0.00% | 0.00% | 0.00% | 0.00% |
| Propane | | 95.59% | 98.00% | 98.00% | 98.00% | 98.00% | 98.00% | 0.00% | 0.00% |
| Oxygen | | 0.00% | 0.00% | 0.00% | 0.00% | 0.00% | 0.00% | 0.00% | 0.00% |
| Ethane | | 4.12% | 1.00% | 1.00% | 1.00% | 1.00% | 1.00% | 0.00% | 0.00% |
| i-Butane | | 0.16% | 0.50% | 0.50% | 0.50% | 0.50% | 0.50% | 0.00% | 0.00% |
| n-Butane | | 0.12% | 0.50% | 0.50% | 0.50% | 0.50% | 0.50% | 0.00% | 0.00% |
| VAPOR | | | | | | | | | |
| MOLAR FLOW RATE | lbmol/hr | - | 1,332.2 | - | - | - | - | - | - |
| MASS FLOW RATE | lb/hr | - | 58,161.8 | - | - | - | - | - | - |
| STD VOL. FLOW | MMSCFD | - | 12.13 | - | - | - | - | - | - |
| ACTUAL VOL. FLOW | ACFM | - | 4,885.82 | - | - | - | - | - | - |
| MOLECULAR WEIGHT | MW | 43.56 | 43.66 | - | - | - | - | - | - |
| DENSITY | lb/ft³ | 0.85 | 0.20 | - | - | - | - | - | - |
| VISCOSITY | cP | 0.0075 | 0.0065 | - | - | - | - | - | - |
| LIGHT LIQUID | | | | | | | | | |
| MOLAR FLOW RATE | lbmol/hr | - | 7,611.75 | 8,944.00 | 8,944.00 | 8,944.00 | 8,944.00 | 9,820.33 | 9,820.33 |
| MASS FLOW RATE | lb/hr | - | 336,241.8 | 394,403.6 | 394,403.6 | 394,403.6 | 394,403.6 | 432,189.7 | 432,189.7 |
| STD VOL. FLOW | BPD | - | 45,439 | 53,374 | 53,374 | 53,374 | 53,374 | 35,856 | 35,856 |
| ACTUAL VOL. FLOW | GPM | - | 1,169.93 | 1,454.78 | 1,454.78 | 1,449.69 | 1,670.83 | 785.40 | 1,061.21 |
| DENSITY | lb/ft³ | - | 35.83 | 33.80 | 33.80 | 33.91 | 29.43 | 68.61 | 50.78 |
| MOLECULAR WEIGHT | MW | - | 44.17 | 44.10 | 44.10 | 44.10 | 44.10 | 44.01 | 44.01 |
| VISCOSITY | cP | - | 0.1841 | 0.1394 | 0.1394 | 0.1399 | 0.0881 | 0.1593 | 0.0622 |
| SURFACE TENSION | Dyne/Cm | - | 14.56 | 11.07 | 11.07 | 11.09 | 5.42 | 13.90 | 0.86 |
| HEAVY LIQUID | | | | | | | | | |
| MOLAR FLOW RATE | lbmol/hr | - | - | - | - | - | - | - | - |
| MASS FLOW RATE | lb/hr | - | - | - | - | - | - | - | - |
| STD VOL. FLOW | BPD | - | - | - | - | - | - | - | - |
| ACTUAL VOL. FLOW | GPM | - | - | - | - | - | - | - | - |
| DENSITY | lb/ft³ | - | - | - | - | - | - | - | - |
| VISCOSITY | cP | - | - | - | - | - | - | - | - |
| SURFACE TENSION | Dyne/Cm | - | - | - | - | - | - | - | - |

| No. | Date | By | REVISION |
|---|---|---|---|
| 90 | 7/17/2006 | LEG | |

ABB

Alstom Power
AEP Unit 5, Conesville, OH
50% CO2 Recovery
Heat & Material Balance
50% 4T R2CTW60
JOB NO: LR12965 REV: A

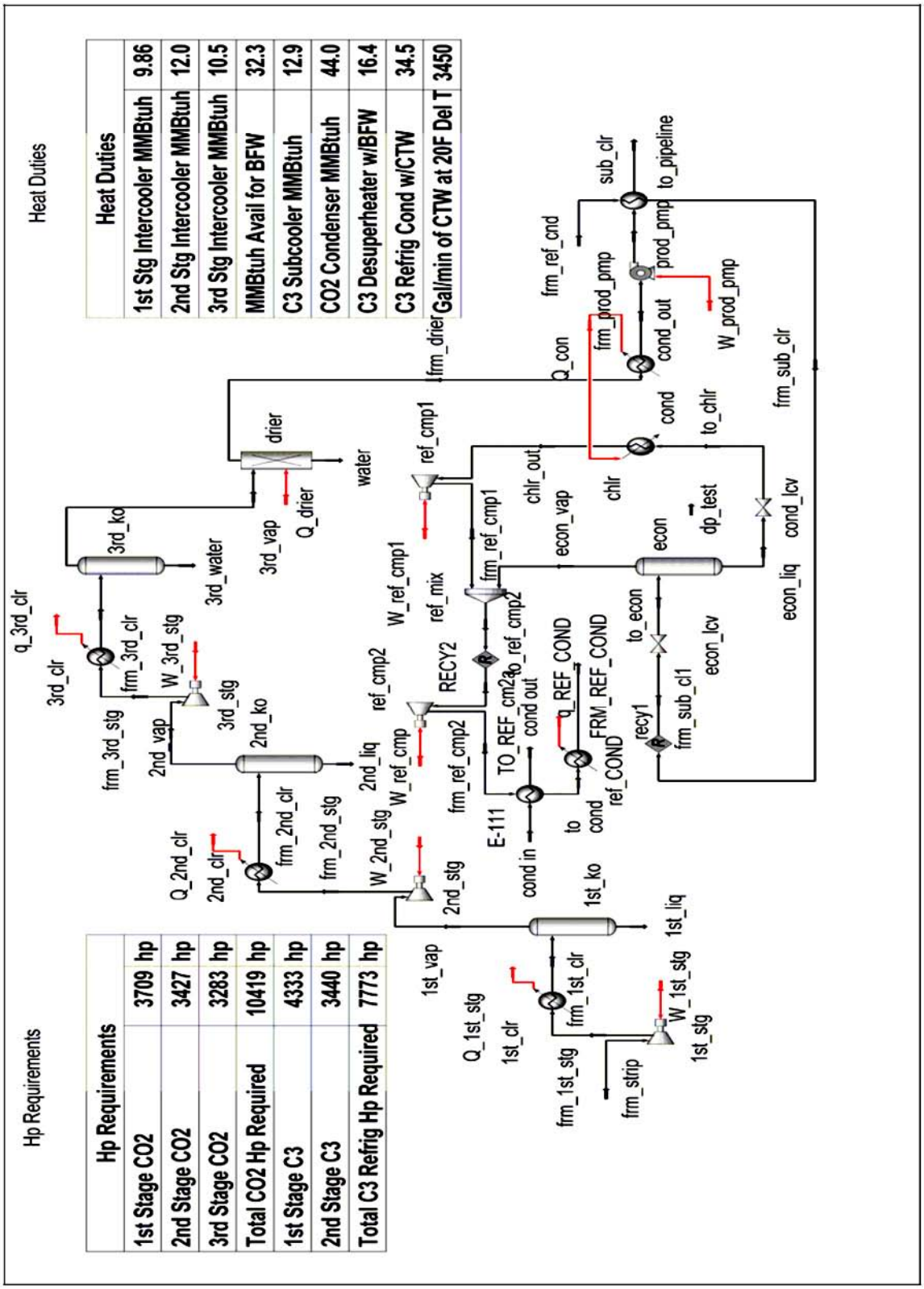


**Figure 3-11: Case 4 $CO_2$ Compression, Dehydration, and Liquefaction Schematic (30% $CO_2$ Recovery)**

**Table 3-25: Case 4 Material and Energy Balance for $CO_2$ Compression, Dehydration, and Liquefaction (30% $CO_2$ Recovery)**

| STREAM NAME | | Total Acid Gas from Stripper | First Stage Discharge | To Exceed Stage | 1st_vap | First Stage Water KO | From Exceed Stage | 2nd Stage Discharge | To 3rd Stage | 2nd_vap | 2nd Stage Water KO | From 3rd Stage | From 3rd Stage Cooler | 3rd Stage Water KO | To Drier | Water From Drier | From Drier To Condenser | Condensed CO2 Product | From C3 Desuperheate r ETH | Refrig Compressor Discharge | Section of 2nd Refrig Compressor | Discharge from 1st Refrig Compr | Refrig from CO2 Condenser |
|---|---|---|---|---|---|---|---|---|---|---|---|---|---|---|---|---|---|---|---|---|---|---|---|
| PFD STREAM NO. | | frm_strip | frm_1st_dir | 1st_vap | 1st_liq | frm_2nd_stg | frm_2nd_dir | 2nd_vap | 2nd_liq | frm_3rd_stg | frm_3rd_dir | 3rd_vap | 3rd_water | | | | | | | | | | |
| VAPOR FRACTION | Molar | 1.000 | 0.993 | 1.000 | 0.000 | 1.000 | 0.974 | 1.000 | 0.000 | 1.000 | 0.988 | 1.000 | 0.000 | 1.000 | 0.000 | 1.000 | 0.000 | 1.000 | 1.000 | 1.000 | 1.000 | 1.000 | 1.000 |
| TEMPERATURE | °F | 115.0 | 125 | 125 | 125 | 275 | 125 | 125 | 125 | 275 | 125 | 125 | 125 | 125 | 125 | 125 | 125 | 205 | 125 | 264 | 174 | 174 | 56 |
| PRESSURE | PSIA | 19.0 | 41 | 41 | 41 | 95 | 89 | 89 | 89 | 206 | 200 | 200 | 200 | 200 | 195 | 195 | 195 | 95 | 199 | 234 | 85 | 85 | 20 |
| MOLAR FLOW RATE | lbmol/hr | 6,253 | 6,253 | 6,208 | 45.49 | 6,208 | 6,208 | 6,046.53 | 161 | 6,047 | 6,046.53 | 72.96 | 5,973.57 | 68.53 | 5,905.04 | 9,247.81 | 5,367.00 | 5,367.00 | 5,367.00 | 5,367.00 | 5,367.00 | 5,367.00 | 5,367.00 |
| MASS FLOW RATE | lb/hr | 266,162.7 | 266,162.7 | 265,342.2 | 820.5 | 265,342.2 | 265,342.2 | 262,435.1 | 2,907.1 | 262,435.1 | 262,435.1 | 1,321.6 | 261,113.5 | 1,234.5 | 259,879.0 | 166,600.2 | 236,668.6 | 236,668.6 | 236,668.6 | 236,668.6 | 236,668.6 | 236,668.6 | 236,668.6 |
| ENERGY | Btu/hr | -1.03E+09 | -1.03E+09 | -1.03E+09 | -5.54E+06 | -1.02E+09 | -1.03E+09 | -1.01E+09 | -1.96E+07 | -1.00E+09 | -1.01E+09 | -8.90E+06 | -1.01E+09 | -8.35E+06 | -9.98E+08 | -1.11E+09 | -2.39E+08 | -2.22E+08 | -2.31E+08 | -2.31E+08 | -2.31E+08 | -2.31E+08 | -2.42E+08 |
| COMPOSITION | Mol % | | | | | | | | | | | | | | | | | | | | | | |
| CO2 | | 94.44% | 94.44% | 95.14% | 0.08% | 95.14% | 95.14% | 97.66% | 0.17% | 97.66% | 97.66% | 0.38% | 98.85% | 0.00% | 100.00% | 0.00% | 0.00% | 0.00% | 0.00% | 0.00% | 0.00% | 0.00% | 0.00% |
| H2O | | 5.56% | 5.56% | 4.86% | 99.92% | 4.86% | 4.86% | 2.34% | 99.83% | 2.34% | 2.34% | 99.62% | 1.15% | 100.00% | 0.00% | 100.00% | 0.00% | 0.00% | 0.00% | 0.00% | 0.00% | 0.00% | 0.00% |
| Nitrogen | | 0.00% | 0.00% | 0.00% | 0.00% | 0.00% | 0.00% | 0.00% | 0.00% | 0.00% | 0.00% | 0.00% | 0.00% | 0.00% | 0.00% | 0.00% | 0.00% | 0.00% | 0.00% | 0.00% | 0.00% | 0.00% | 0.00% |
| Propane | | 0.00% | 0.00% | 0.00% | 0.00% | 0.00% | 0.00% | 0.00% | 0.00% | 0.00% | 0.00% | 0.00% | 0.00% | 0.00% | 0.00% | 0.00% | 0.00% | 98.00% | 98.00% | 98.00% | 98.00% | 98.00% | 98.00% |
| Oxygen | | 0.00% | 0.00% | 0.00% | 0.00% | 0.00% | 0.00% | 0.00% | 0.00% | 0.00% | 0.00% | 0.00% | 0.00% | 0.00% | 0.00% | 0.00% | 0.00% | 0.00% | 0.00% | 0.00% | 0.00% | 0.00% | 0.00% |
| Ethane | | 0.00% | 0.00% | 0.00% | 0.00% | 0.00% | 0.00% | 0.00% | 0.00% | 0.00% | 0.00% | 0.00% | 0.00% | 0.00% | 0.00% | 0.00% | 0.00% | 1.00% | 1.00% | 1.00% | 1.00% | 1.00% | 1.00% |
| i-Butane | | 0.00% | 0.00% | 0.00% | 0.00% | 0.00% | 0.00% | 0.00% | 0.00% | 0.00% | 0.00% | 0.00% | 0.00% | 0.00% | 0.00% | 0.00% | 0.00% | 0.50% | 0.50% | 0.50% | 0.50% | 0.50% | 0.50% |
| n-Butane | | 0.00% | 0.00% | 0.00% | 0.00% | 0.00% | 0.00% | 0.00% | 0.00% | 0.00% | 0.00% | 0.00% | 0.00% | 0.00% | 0.00% | 0.00% | 0.00% | 0.50% | 0.50% | 0.50% | 0.50% | 0.50% | 0.50% |
| VAPOR | | | | | | | | | | | | | | | | | | | | | | | |
| MOLAR FLOW RATE | lbmol/hr | 6,253 | 6,208 | 6,208 | 0 | 6,208 | 6,047 | 6,047 | 0 | 6,047 | 5,973.6 | - | 5,973.6 | - | 5,905.0 | - | 5,367.0 | 5,367.0 | 5,367.0 | 5,367.0 | 5,367.0 | 5,367.0 | 5,367.0 |
| MASS FLOW RATE | lb/hr | 266,162.7 | 265,342.2 | 265,342.2 | - | 265,342.2 | 262,435.1 | 262,435.1 | - | 262,435.1 | 261,113.5 | - | 261,113.5 | - | 259,879.0 | - | 236,668.6 | 236,668.6 | 236,668.6 | 236,668.6 | 236,668.6 | 236,668.6 | 236,668.6 |
| STD VOL FLOW | MMSCFD | 56.95 | 56.54 | 56.54 | - | 56.54 | 55.07 | 55.07 | - | 55.07 | 54.41 | - | 54.41 | - | 53.78 | - | 48.86 | 48.86 | 48.86 | 48.86 | 48.86 | 48.86 | 48.86 |
| ACTUAL VOL FLOW | ACFM | 33,611 | 15,628 | 15,628 | 0 | 8,463 | 6,912 | 6,912 | 0 | 3,746 | 2,934.85 | - | 2,934.85 | - | 2,984.54 | - | 2,241.58 | 2,241.58 | 2,619.65 | 6,706.10 | 6,706.10 | 6,706.10 | 24,127.54 |
| MOLECULAR WEIGHT | MW | 42.57 | 42.75 | 42.75 | - | 42.75 | 43.40 | 43.40 | - | 43.40 | 43.71 | - | 43.71 | - | 44.01 | - | 44.10 | 44.10 | 44.10 | 44.10 | 44.10 | 44.10 | 44.10 |
| DENSITY | lb/ft³ | 0.13 | 0.28 | 0.28 | - | 0.52 | 0.63 | 0.63 | - | 1.17 | 1.48 | - | 1.48 | - | 1.45 | - | 1.76 | 1.51 | 0.59 | 0.59 | 0.59 | 0.59 | 0.16 |
| VISCOSITY | cP | 0.0151 | 0.0155 | 0.0155 | - | 0.0201 | 0.0160 | 0.0160 | - | 0.0207 | 0.0164 | - | 0.0164 | - | 0.0165 | - | 0.0097 | 0.0118 | 0.0099 | 0.0099 | 0.0099 | 0.0099 | 0.0079 |
| LIGHT LIQUID | | | | | | | | | | | | | | | | | | | | | | | |
| MOLAR FLOW RATE | lbmol/hr | - | - | - | - | - | - | - | - | - | - | - | - | - | - | - | - | - | - | - | - | - | - |
| MASS FLOW RATE | lb/hr | - | - | - | - | - | - | - | - | - | - | - | - | - | - | - | - | - | - | - | - | - | - |
| STD VOL FLOW | BPD | - | - | - | - | - | - | - | - | - | - | - | - | - | - | - | - | - | - | - | - | - | - |
| ACTUAL VOL FLOW | GPM | - | - | - | - | - | - | - | - | - | - | - | - | - | - | - | - | - | - | - | - | - | - |
| DENSITY | lb/ft³ | - | - | - | - | - | - | - | - | - | - | - | - | - | - | - | - | - | - | - | - | - | - |
| MOLECULAR WEIGHT | MW | - | - | - | - | - | - | - | - | - | - | - | - | - | - | - | - | - | - | - | - | - | - |
| VISCOSITY | cP | - | - | - | - | - | - | - | - | - | - | - | - | - | - | - | - | - | - | - | - | - | - |
| SURFACE TENSION | Dyne/Cm | - | - | - | - | - | - | - | - | - | - | - | - | - | - | - | - | - | - | - | - | - | - |
| HEAVY LIQUID | | | | | | | | | | | | | | | | | | | | | | | |
| MOLAR FLOW RATE | lbmol/hr | - | 45.49 | - | 45.49 | - | 160.98 | - | 160.98 | - | 72.96 | 72.96 | - | 68.53 | - | 9,247.81 | - | - | - | - | - | - | - |
| MASS FLOW RATE | lb/hr | - | 820.5 | - | 820.5 | - | 2,907.1 | - | 2,907.1 | - | 1,321.6 | 1,321.6 | - | 1,234.5 | - | 166,600.2 | - | - | - | - | - | - | - |
| STD VOL FLOW | BPD | - | 96 | - | 96 | - | 200 | - | 200 | - | 91 | 91 | - | 85 | - | 11,431 | - | - | - | - | - | - | - |
| ACTUAL VOL FLOW | GPM | - | 1.66 | - | 1.66 | - | 5.88 | - | 5.88 | - | 2.67 | 2.67 | - | 2.50 | - | 349.66 | - | - | - | - | - | - | - |
| DENSITY | lb/ft³ | - | 61.63 | - | 61.63 | - | 61.66 | - | 61.66 | - | 61.72 | 61.72 | - | 61.63 | - | 59.40 | - | - | - | - | - | - | - |
| VISCOSITY | cP | - | 0.5291 | - | 0.5291 | - | 0.5651 | - | 0.5651 | - | 0.5621 | 0.5621 | - | 0.5272 | - | 0.2914 | - | - | - | - | - | - | - |
| SURFACE TENSION | Dyne/Cm | - | 67.39 | - | 67.39 | - | 67.33 | - | 67.33 | - | 67.19 | 67.19 | - | 67.40 | - | 59.38 | - | - | - | - | - | - | - |

| No. | Date | By | REVISION |
|---|---|---|---|
| | | | |
| | | | |
| | | | |
| 90 | 7/17/2006 | LEG | |

NOTES:

ABB

Alstom Power
AEP Unit 5, Conesville, OH
30% CO2 Recovery
Heat & Material Balance
30%_3T_R2CTW80
JOB NO: LR12965 REV: A

**Table 3-25: Case 4 Material and Energy Balance for $CO_2$ Compression, Dehydration, and Liquefaction (30% $CO_2$ Recovery), continued**

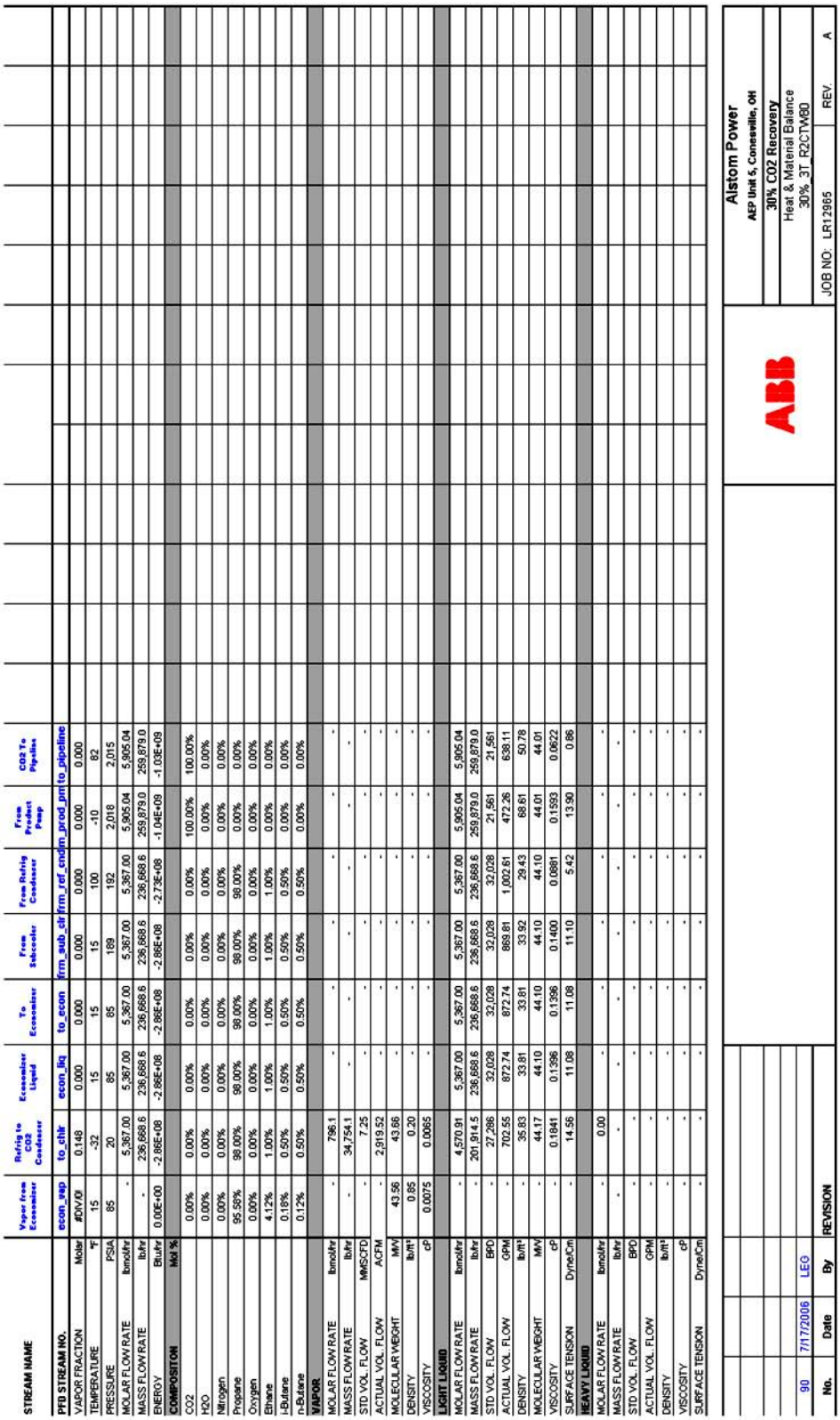

| STREAM NAME | | Vapor from Economizer | Refrig to CO2 Condenser | Economizer Liquid | To Economizer | From Subcooler | From Refrig Condenser | From Product Pump | CO2 To Pipeline |
|---|---|---|---|---|---|---|---|---|---|
| PFD STREAM NO. | | econ_vap | to_chlr | econ_liq | to_econ | frm_sub_clr | frm_ref_cndnr | frm_prod_pmp | to_pipeline |
| VAPOR FRACTION | Mole | #DIV/0! | 0.148 | 0.000 | 0.000 | 0.000 | 0.000 | 0.000 | 0.000 |
| TEMPERATURE | °F | 15 | -32 | 15 | 15 | 15 | 100 | -10 | 82 |
| PRESSURE | PSIA | 85 | 20 | 85 | 85 | 189 | 192 | 2,018 | 2,015 |
| MOLAR FLOW RATE | lbmol/hr | - | 5,367.00 | 5,367.00 | 5,367.00 | 5,367.00 | 5,367.00 | 5,905.04 | 5,905.04 |
| MASS FLOW RATE | lb/hr | - | 236,668.6 | 236,668.6 | 236,668.6 | 236,668.6 | 236,668.6 | 259,879.0 | 259,879.0 |
| ENERGY | Btu/hr | 0.00E+00 | -2.86E+08 | -2.86E+08 | -2.86E+08 | -2.86E+08 | -2.73E+08 | -1.04E+09 | -1.03E+09 |
| COMPOSITION | Mol % | | | | | | | | |
| CO2 | | 0.00% | 0.00% | 0.00% | 0.00% | 0.00% | 0.00% | 100.00% | 100.00% |
| H2O | | 0.00% | 0.00% | 0.00% | 0.00% | 0.00% | 0.00% | 0.00% | 0.00% |
| Nitrogen | | 0.00% | 0.00% | 0.00% | 0.00% | 0.00% | 0.00% | 0.00% | 0.00% |
| Propane | | 95.58% | 98.00% | 98.00% | 98.00% | 98.00% | 98.00% | 0.00% | 0.00% |
| Oxygen | | 0.00% | 0.00% | 0.00% | 0.00% | 0.00% | 0.00% | 0.00% | 0.00% |
| Ethane | | 4.12% | 1.00% | 1.00% | 1.00% | 1.00% | 1.00% | 0.00% | 0.00% |
| i-Butane | | 0.18% | 0.50% | 0.50% | 0.50% | 0.50% | 0.50% | 0.00% | 0.00% |
| n-Butane | | 0.12% | 0.50% | 0.50% | 0.50% | 0.50% | 0.50% | 0.00% | 0.00% |
| VAPOR | | | | | | | | | |
| MOLAR FLOW RATE | lbmol/hr | - | 796.1 | - | - | - | - | - | - |
| MASS FLOW RATE | lb/hr | - | 34,754.1 | - | - | - | - | - | - |
| STD VOL FLOW | MMSCFD | - | 7.25 | - | - | - | - | - | - |
| ACTUAL VOL FLOW | ACFM | - | 2,919.52 | - | - | - | - | - | - |
| MOLECULAR WEIGHT | MW | 43.56 | 43.66 | - | - | - | - | - | - |
| DENSITY | lb/ft³ | 0.85 | 0.20 | - | - | - | - | - | - |
| VISCOSITY | cP | 0.0075 | 0.0065 | - | - | - | - | - | - |
| LIGHT LIQUID | | | | | | | | | |
| MOLAR FLOW RATE | lbmol/hr | - | 4,570.91 | 5,367.00 | 5,367.00 | 5,367.00 | 5,367.00 | 5,905.04 | 5,905.04 |
| MASS FLOW RATE | lb/hr | - | 201,914.5 | 236,668.6 | 236,668.6 | 236,668.6 | 236,668.6 | 259,879.0 | 259,879.0 |
| STD VOL FLOW | BPD | - | 27,286 | 32,028 | 32,028 | 32,028 | 32,028 | 21,561 | 21,561 |
| ACTUAL VOL FLOW | GPM | - | 702.55 | 872.74 | 872.74 | 869.81 | 1,002.61 | 472.26 | 638.11 |
| DENSITY | lb/ft³ | - | 35.83 | 33.81 | 33.81 | 33.92 | 29.43 | 68.61 | 50.78 |
| MOLECULAR WEIGHT | MW | - | 44.17 | 44.10 | 44.10 | 44.10 | 44.10 | 44.01 | 44.01 |
| VISCOSITY | cP | - | 0.1841 | 0.1396 | 0.1396 | 0.1400 | 0.0661 | 0.1593 | 0.0622 |
| SURFACE TENSION | Dyne/Cm | - | 14.56 | 11.08 | 11.08 | 11.10 | 5.42 | 13.90 | 0.86 |
| HEAVY LIQUID | | | | | | | | | |
| MOLAR FLOW RATE | lbmol/hr | - | 0.00 | - | - | - | - | - | - |
| MASS FLOW RATE | lb/hr | - | - | - | - | - | - | - | - |
| STD VOL FLOW | BPD | - | - | - | - | - | - | - | - |
| ACTUAL VOL FLOW | GPM | - | - | - | - | - | - | - | - |
| DENSITY | lb/ft³ | - | - | - | - | - | - | - | - |
| VISCOSITY | cP | - | - | - | - | - | - | - | - |
| SURFACE TENSION | Dyne/Cm | - | - | - | - | - | - | - | - |

| No. | Date | By | REVISION |
|---|---|---|---|
| | | | |
| | | | |
| | | | |
| | | | |
| 90 | 7/17/2006 | LEG | |

ABB

Alstom Power
AEP Unit 5, Conesville, OH
30% CO2 Recovery
Heat & Material Balance
30%_3T_R2CTW80
JOB NO: LR12965 REV: A

### $CO_2$ Product Specification and Actual Composition (Cases 1-4)

The $CO_2$ product specification and actual composition are shown in Table 3-26. Note that no mercaptans nor methane and heavier hydrocarbons are shown in the flue gas analysis. Therefore, these components are shown as zero in Table 3-26. A $CO_2$ product pressure of 139 bara (2,015 psia) was used for all the cases.

**Table 3-26: $CO_2$ Product Specification and Calculated Product Comparison (Cases 1-4)**

| Component | Specification | Calculated Results |
|---|---|---|
| | Mole % | Mole % |
| $O_2$ | 0.0100 | <0.0050 |
| $N_2$ | 0.6000 | <0.0400 |
| $H_2O$ | 0.0002 | <0.0002 |
| $CO_2$ | 96.000 | >99.95 |
| $H_2S$ | 0.0001 | <0.0001 |
| Mercaptans | 0.0300 | 0.00 |
| $CH_4$ | 0.3000 | 0.00 |
| $C_2$ + Hydrocarbons | 2.0000 | 0.00 |

#### 3.1.4.2 Consumption of Chemicals and Desiccants - $CO_2$ Removal, Compression, and Liquefaction System (Cases 1-4)

The table below shows the daily chemical consumption for Cases 1-4 with 90%-30% $CO_2$ recovery respectively. These totals do not include chemicals provided by the cooling tower service people nor disposal of waste, which are handled as a component of operating costs referred to as contracted services and waste handling, respectively.

**Table 3-27: Chemical and Desiccants Consumption (lbm/day) for Cases-1-4 (90%-30% $CO_2$ Recovery)**

| Chemical | Case 1 (90% Capture) | Case 2 (70% Capture) | Case 3 (50% Capture) | Case 4 (30% Capture) |
|---|---|---|---|---|
| **Soda Ash** | 2,328 | 1,811 | 1,293 | 776 |
| **MEA** | 28,046 | 21,813 | 15,581 | 9,349 |
| **Corrosion inhibitor** | 1,028 | 800 | 571 | 343 |
| **Diatomaceous earth** | 458 | 356 | 254 | 153 |
| **Molecular sieve** | 257 | 200 | 143 | 86 |
| **Activated carbon** | 1,546 | 1,202 | 859 | 515 |

#### 3.1.4.3 Equipment - $CO_2$ Removal, Compression, and Liquefaction System (Cases 1-4)

Complete equipment data summary sheets for Cases 1-4 are provided in Appendix II. These equipment lists have been presented in the so-called “short spec” format, which provides

adequate data for developing a factored cost estimate. Table 3-28 shows a summary of the major equipment for the $CO_2$ Removal, Compression, and Liquefaction Systems. Three categories are shown in this table (Compressors, Towers/Internals, and Heat Exchangers). These three categories represent, in that order, the three most costly accounts in the cost estimates for these systems (See Section 3.3). These three accounts represent ~90% of the total equipment costs for these systems.

**Table 3-28: Equipment Summary - $CO_2$ Removal, Compression, and Liquefaction System (Cases 1-4)**

| | Case 1 (90% Capture) | | Case 2 (70% Capture) | | Case 3 (50% Capture) | | Case 4 (30% Capture) | |
|---|---|---|---|---|---|---|---|---|
| **Compressors** | No. | HP each | No. | HP each | No. | HP each | No. | HP each |
| $CO_2$ Compressor | 2 | 15,600 | 2 | 12,100 | 1 | 17,300 | 1 | 10,400 |
| Propane Compressor | 2 | 11,700 | 2 | 10,200 | 1 | 14,600 | 1 | 8,800 |
| LP Let Down Turbine | 1 | 60,800 | 1 | 47,200 | 1 | 33,600 | 1 | 20,000 |
| **Towers/Internals** | No. | ID/Height (ft) | No. | ID/Height (ft) | No. | ID/Height (ft) | No. | ID/Height (ft) |
| Absorber/Cooler | 2 | 34 / 126 | 2 | 30 / 126 | 2 | 25 / 126 | 1 | 28 / 126 |
| Stripper | 2 | 22 / 50 | 2 | 19 / 50 | 2 | 16 / 50 | 1 | 20 / 50 |
| **Heat Exchangers** | No. | $10^6$-Btu/hr ea. | No. | $10^6$-Btu/hr ea. | No. | $10^6$-Btu/hr ea. | No. | $10^6$-Btu/hr ea. |
| Reboilers | 10 | 120.0 | 8 | 120.0 | 6 | 120.0 | 4 | 120.0 |
| Solvent Stripper CW Condenser | 12 | 20.0 | 10 | 20.0 | 7 | 20.0 | 4 | 20.0 |
| Other Heat Exchangers / Avg Duty | 36 | 61.0 | 35 | 57.0 | 25 | 62.0 | 16 | 58.0 |
| **Total Heat Exchangers / Avg Duty** | 58 | 62.7 | 53 | 59.5 | 38 | 63.4 | 24 | 62.0 |

A review of this table shows how the number of compression trains is reduced from two trains for the 90% and 70% recovery cases to one train for the 50% and 30% recovery cases. Similarly the number of absorber/stripper trains is reduced from two trains for the 90%, 70% and 50% recovery cases to one train for the 30% recovery case. Additionally, the sizes of the vessels and power requirements for the compressors are also changing. The heat exchanger selections also show variation between the cases. Figure 3-12 is provided to help illustrate how the number of trains (compressor, absorber, and stripper), compressor power requirements, vessel sizes, and the number and heat duty of the heat exchangers in the system change as a function of the $CO_2$ recovery percentage.

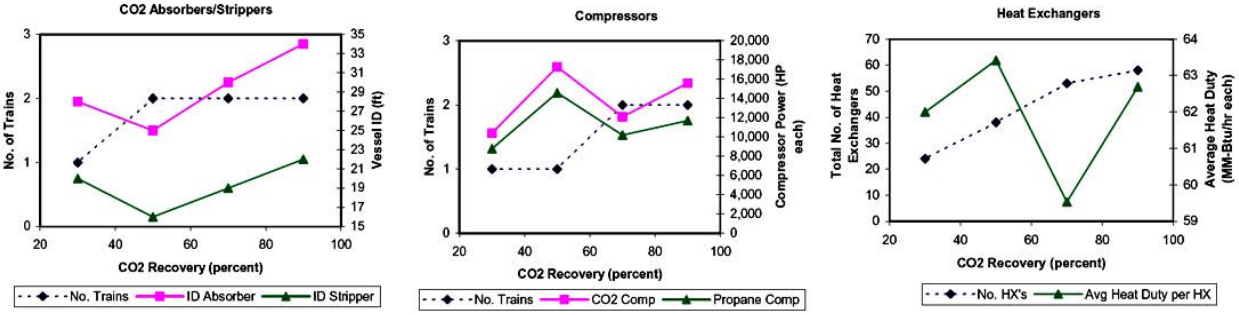


**Figure 3-12: Equipment Variations – $CO_2$ Removal, Compression, and Liquefaction Systems (Cases 1-4)**

### 3.1.4.4 Utilities Usage and Auxiliary Power Requirements - $CO_2$ Removal, Compression, and Liquefaction System (Cases 1-4)

Table 3-29 shows the $CO_2$ Removal and Compression System utilities usage for Cases 1-4. Table 3-30, Table 3-31, Table 3-32, and Table 3-33 show auxiliary power requirements for Cases 1-4 respectively (90%-30% $CO_2$ recovery).

**Table 3-29: Consumption of Utilities for Cases 1-4 (90%-30% $CO_2$ Recovery)**

| Utility | Units | Case 1 (90% Capture) | Case 2 (70% Recovery) | Case 3 (50% Capture) | Case 4 (30% Capture) |
|---|---|---|---|---|---|
| Natural Gas for $CO_2$ Dryers | SCF/day | 312,000 | 232,000 | 161,000 | 101,000 |
| Saturated Steam at 45 psia | lbm/hr | 1,300,000 | 1,010,000 | 722,000 | 433,333 |
| 80°F Cooling Tower Water | Gal/minute at 30°F rise | 69,694 | 54,217 | 38,693 | 22,991 |

**Table 3-30: Auxiliary Power Usage for Case 1 (90% $CO_2$ Recovery)**

| Number of Trains | Tag no. | Description | Number Operating per train | Power ea w/ 0.95 motor eff (kW) | Total all trains (kW) |
|---|---|---|---|---|---|
| 2 | Pump-2 | Wash Water Pump | 2 | 52 | 210 |
| 2 | Pump-1 | Direct Contact Cooler Water Pump | 2 | 90 | 359 |
| 2 | P-100 | Rich Solvent Pump | 2 | 430 | 1,719 |
| 2 | P-102 | Lean Solvent Pump | 2 | 291 | 1,166 |
| 2 | P-101 | Semi-Lean Pump | 2 | 130 | 519 |
| 2 | | Solvent Stripper Reflux Pump | 1 | 11 | 22 |
| 2 | | Filter Circ. Pump | 2 | 21 | 85 |
| 7 | | $CO_2$ Pipeline Pump | 1 | 304 | 2,130 |
| 2 | | LP condensate booster pump | 2 | 108 | 434 |
| 2 | | Soda ash metering pump | 1 | 0 | 0 |
| | | | | | |
| 2 | | Flue Gas FD Fan | 1 | 2,579 | 5,158 |
| 2 | | $CO_2$ Compressor (Motor driven) | 1 | 12,270 | 24,539 |
| 2 | | Propane Refrigeration Compressors (2) | 1 | 9,153 | 18,306 |
| 1 | | LP steam turbine/ generator | NA | NA | NA |
| | | | | | |
| 2 | | $CO_2$ Dryer Package | 1 | 146 | 292 |
| | | | | | |
| | | **Total** | | | 54,939 |

**Table 3-31: Auxiliary Power Usage for Case 2 (70% $CO_2$ Recovery)**

| Number of Trains | Tag no. | Description | Number Operating per train | Power ea w/ 0.95 motor eff (kW) | Total all trains (kW) |
|---|---|---|---|---|---|
| 2 | Pump-2 | Wash Water Pump | 2 | 41 | 163 |
| 2 | Pump-1 | Direct Contact Cooler Water Pump | 2 | 69 | 277 |
| 2 | P-100 | Rich Solvent Pump | 2 | 334 | 1,337 |
| 2 | P-102 | Lean Solvent Pump | 2 | 228 | 912 |
| 2 | P-101 | Semi-Lean Pump | 2 | 100 | 398 |
| 2 | | Solvent Stripper Reflux Pump | 1 | 9 | 17 |
| 2 | | Filter Circ. Pump | 2 | 17 | 66 |
| 5 | | $CO_2$ Pipeline Pump | 1 | 330 | 1,650 |
| 2 | | LP condensate booster pump | 2 | 84 | 337 |
| 2 | | Soda ash metering pump | 1 | 0 | 0 |
| | | | | | |
| 2 | | Flue Gas FD Fan | 1 | 2,006 | 4,012 |
| 2 | | $CO_2$ Compressor (Motor driven) | 1 | 9,531 | 19,062 |
| 2 | | Propane Refrigeration Compressors (2) | 1 | 7,113 | 14,226 |
| 1 | | LP steam turbine/ generator | NA | NA | NA |
| | | | | | |
| 2 | | $CO_2$ Dryer Package | 1 | 120 | 240 |
| | | | | | |
| | | **Total** | | | 42,697 |

**Table 3-32: Auxiliary Power Usage for Case 3 (50% $CO_2$ Recovery)**

| Number of Trains | Tag no. | Description | Number Operating per train | Power ea w/ 0.95 motor eff. (kW) | Total all trains (kW) |
|---|---|---|---|---|---|
| 2 | Pump-2 | Wash Water Pump | 2 | 29 | 117 |
| 2 | Pump-1 | Direct Contact Cooler Water Pump | 2 | 49 | 196 |
| 2 | P-100 | Rich Solvent Pump | 2 | 239 | 955 |
| 2 | P-102 | Lean Solvent Pump | 2 | 163 | 651 |
| 2 | P-101 | Semi-Lean Pump | 2 | 71 | 284 |
| 2 | | Solvent Stripper Reflux Pump | 1 | 6 | 12 |
| 2 | | Filter Circ. Pump | 2 | 12 | 47 |
| 4 | | $CO_2$ Pipeline Pump | 1 | 295 | 1,180 |
| 2 | | LP condensate booster pump | 2 | 60 | 241 |
| 2 | | Soda ash metering pump | 1 | 0 | 0 |
| | | | | | |
| 2 | | Flue Gas FD Fan | 1 | 1,433 | 2,866 |
| 1 | | $CO_2$ Compressor (Motor driven) | 1 | 13,602 | 13,602 |
| 1 | | Propane Refrigeration Compressors (2) | 1 | 10,154 | 10,154 |
| 1 | | LP steam turbine/ generator | NA | NA | NA |
| | | | | | |
| 1 | | $CO_2$ Dryer Package | 1 | 161 | 161 |
| | | | | | |
| | | **Total** | | | 30,466 |

**Table 3-33: Auxiliary Power Usage for Case 4 (30% $CO_2$ Recovery)**

| Number of Trains | Tag no. | Description | Number Operating per train | Power ea w/ 0.95 motor eff (kW) | Total all trains (kW) |
|---|---|---|---|---|---|
| 1 | Pump-2 | Wash Water Pump | 2 | 35 | 70 |
| 1 | Pump-1 | Direct Contact Cooler Water Pump | 2 | 58 | 116 |
| 1 | P-100 | Rich Solvent Pump | 2 | 287 | 574 |
| 1 | P-102 | Lean Solvent Pump | 2 | 193 | 386 |
| 1 | P-101 | Semi-Lean Pump | 2 | 88 | 176 |
| 1 | | Solvent Stripper Reflux Pump | 1 | 8 | 8 |
| 1 | | Filter Circ. Pump | 2 | 14 | 28 |
| 3 | | $CO_2$ Pipeline Pump | 1 | 237 | 711 |
| 1 | | LP condensate booster pump | 2 | 72 | 145 |
| 1 | | Soda ash metering pump | 1 | 0 | 0 |
| | | | | | |
| 1 | | Flue Gas FD Fan | 1 | 1,719 | 1,719 |
| 1 | | $CO_2$ Compressor (Motor driven) | 1 | 8,178 | 8,178 |
| 1 | | Propane Refrigeration Compressors (2) | 1 | 6,101 | 6,101 |
| 1 | | LP steam turbine/ generator | NA | NA | NA |
| | | | | | |
| 1 | | $CO_2$ Dryer Package | 1 | 101 | 101 |
| | | | | | |
| | | **Total** | | | 18,312 |

### 3.1.4.5 Design Considerations and System Optimization - $CO_2$ Removal, Compression, and Liquefaction System (Cases 1-4)

A commercial simulator called ProTreat® Version 3.3 was used to simulate the advanced MEA process and Hysys® Version 2004.2 was used to simulate $CO_2$ compression and liquefaction system. The key process parameters used are listed in Table 3-34 below.

**Table 3-34: Key Process Parameters for Simulation (Cases 1-4)**

| Process Parameter | Value |
|---|---|
| $CO_2$ in Feed, mol % | 12.8 |
| $O_2$ in Feed, mol % | 2.9 |
| $SO_2$ in Feed, ppmv | 2 |
| Solvent Type | MEA |
| Solvent Concentration, Wt% | 30 |
| Lean Loading, mol $CO_2$/mol amine | 0.19 |
| Rich Loading, mol $CO_2$/mol amine | 0.49 |
| Stripper Feed Temp, °F | 205 |
| Stripper Bottom Temp, °F | 247 |
| Feed Temp To Absorber, °F | 115 |
| $CO_2$ Recovery, % | 30-90 |
| Absorber Pressure Drop, psi | 1 |
| Stripper Pressure Drop, psi | 0.7 |
| Rich/Lean Exchanger Approach, °F | 40 |
| $CO_2$ Compressor 1st /Stage Temp, °F | 125 |
| Liquid $CO_2$ Temp, °F | 82 |
| Steam Use, lbs Steam/ lb $CO_2$ captured | 1.67 |
| Liquid $CO_2$ Pressure, psia | 2,015 |

The following parameters were investigated with the objective of reducing the MEA plant energy requirements and ultimately the cost of electricity produced by the power plant.

**Number of Absorber and Stripper Trains:**

The number of absorbers and strippers is based on using a maximum diameter of 12.2 m (40 ft). The minimum diameter is achieved by bypassing available flue gas while keeping the percentage of $CO_2$ absorbed in the absorber at 90%.

**Absorber Temperature:**

Two temperatures were investigated: 58°C (136°F) and 46°C (115°F). A flue gas cooler was added upstream of the absorber to cool the flue gas from 58°C (136°F) to 46°C (115°F). At 58°C (136°F), 90% $CO_2$ recovery is not achievable due to equilibrium constraints.

**Stripper Temperature / Reboiler Pressure:**

A preliminary optimization study was done to define the best reboiler pressure for the design of this plant. This was done for the 90% capture case only (Case 1). In this study it was observed that a reduction in reboiler pressure (let down turbine exhaust pressure) would have the following primary impacts:

- Increased Let Down Turbine Output
- Increased Net Plant Output
- Higher Plant Thermal Efficiency
- Increased Let Down Turbine Cost
- Increased Reboiler Cost
- Higher Total Retrofit Costs

The results for the reboiler pressure optimization study are shown in Figure 3-13. The graph on the left shows how the plant thermal efficiency improves linearly and plant retrofit cost increases exponentially as let down turbine outlet pressure is reduced. The graph on the right shows how the combined effect of plant efficiency improvement and retrofit cost increase causes the incremental cost of electricity (COE) to be minimized at a let down turbine outlet pressure of about 2.8-3.4 bara (40-50 psia). A let down turbine outlet pressure of 3.2 bara (47 psia) was selected for this study. Allowing about 0.14 bar (2 psi) for pressure drop between the let down turbine exhaust and the reboiler yields a reboiler operating pressure of 3.1 bara (45 psia). The use of 3.1 bara (45 psia) pressure steam in the stripper reboiler causes no significant sacrifice in the $CO_2$ loading in the lean amine.

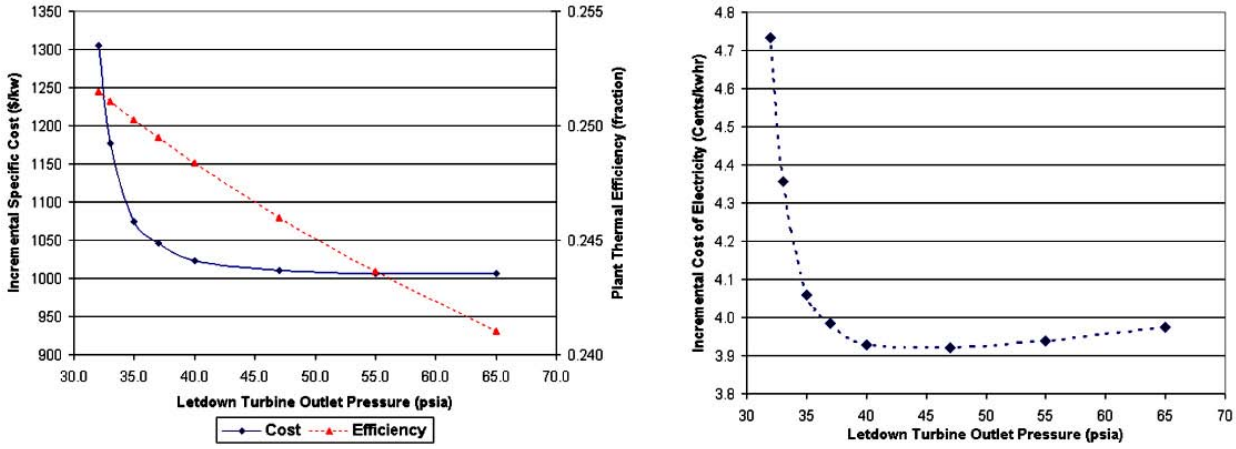


**Figure 3-13: Reboiler Pressure Optimization Study Results (Case 1)**

### Absorber and Stripper Packing Type and Depth:

Eighty-five types of packing were investigated to optimize the absorber and stripper diameter. The packing depth in both the absorber and stripper was optimized until a 90% $CO_2$ recovery was achieved.

### Location and Amount of the Semi-Lean Amine to the Absorber:

The entry location of the semi-lean amine stream to the absorber and the amount of semi-lean amine was varied to minimize energy consumption and maximize $CO_2$ recovery.

### Heat Exchanger Types:

Plate Frame Heat Exchangers, Shell and Tube Exchangers, and Air-Cooled Exchangers were investigated. Plate frame type heat exchangers were used as much as possible to improve energy efficiency and reduce costs.

### Number of $CO_2$ Compression Trains:

Two compression trains are specified to provide for plant turndown capability for the 90% and 70% $CO_2$ recovery cases. At lower recoveries (50% and 30%) just one train is provided.

### 3.1.4.6 Outside Boundary Limits (OSBL) Systems - $CO_2$ Removal, Compression, and Liquefaction System (Cases 1-4)

**Reclaimer Bottoms:**

The reclaimer bottoms are generated during the process of recovering MEA from heat stable salts (HSS). HSS are produced from the reaction of MEA with $SO_2$ and $NO_2$. The HSS accumulate in the reclaimer during the lean amine feed portion of the reclaiming cycle. The volume of reclaimer bottoms generated will depend on the quantity of $SO_2$ and $NO_2$ not removed in the Flue Gas Scrubber. A typical composition of the waste is presented below.

**Table 3-35: Reclaimer Bottoms Composition (Cases 1-4)**

| | |
|---|---|
| MEA | 9.5 wt.% |
| $NH_3$ | 0.02 wt.% |
| NaCl | 0.6 wt.% |
| $Na_2SO_4$ | 6.6 wt.% |
| $Na_2CO_3$ | 1.7 wt.% |
| Insolubles | 1.3 wt.% |
| Total Nitrogen | 5.6 wt.% |
| Total Organic Carbon | 15.6 wt.% |
| $H_2O$ | 59.08 wt.% |
| pH | 10.7 |
| Specific Gravity | 1.14 |

**Filter Residues:**

A pressure leaf filter filters a slipstream of lean amine. Diatomaceous earth is used as a filter-aid for pre-coating the leaves and as a body feed. Filter cycles depend on the rate of flow through the filter, the amount of filter aid applied, and the quantity of contaminants in the solvent. A typical composition of the filter residue is provided in the table below. These will be disposed of by a contracted service hauling away the drums of spent cake.

**Table 3-36: Filter Residue Composition (Cases 1-4)**

| | |
|---|---|
| MEA | 2.5 wt.% |
| Total Organic Carbon | 1.5 wt.% |
| $SiO_2$ | 43 wt.% |
| Iron Oxides | 32 wt.% |
| Aluminum Oxides | 15 wt.% |
| $H_2O$ | 6 wt.% |
| pH | 10.0 |
| Specific Gravity | 2.6 |

**Excess Solvent Stripper Reflux Water:**

The $CO_2$ Recovery Facility has been designed to operate in a manner to avoid accumulation of water in the Absorber / Stripper system. By controlling the temperature of the scrubbed flue gas entering the absorber the MEA system can be kept in water balance. Excess water can accumulate in the Stripper Reflux Drum and can be reused once the system is corrected to operate in a balanced manner. Should water need to be discarded, contaminants will include small amounts of $CO_2$ and MEA.

**Absorber Flue Gas Scrubber/Cooler:**

The existing plant uses lime in its flue gas desulfurizer. In the cost estimate of this plant, it has been assumed that the existing plant disposal facilities can accommodate the additional water blow down load from the flue gas cooler located under the absorber.

**Relief Requirements:**

The relief valve discharges from the $CO_2$ Recovery Unit are discharged to atmosphere. No tie-ins to any flare header are necessary.

#### 3.1.4.7 Plant Layout - $CO_2$ Removal, Compression, and Liquefaction System (Cases 1-4)

Please refer to Appendix I for the plant layout drawings for the modified Conesville #5 Unit. The plant layout for the $CO_2$ capture equipment has been designed in accordance with a spacing chart called “Oil and Chemical Plant Layout and Spacing” Section IM.2.5.2 issued by Industrial Risk Insurers (IRI).

The open-cup flash point of MEA is 93°C (200°F); and, therefore, it will not easily ignite. In addition to MEA, the corrosion inhibitor is the only other hydrocarbon liquid within the battery limits. The flash point of this material is higher than that of MEA and is handled in small quantities. Thus, no highly flammable materials are handled within the $CO_2$ Recovery Unit. As the chemicals used in the process present no fire hazard, there is an opportunity to reduce the minimum spacing between equipment from that normally considered acceptable in hydrocarbon handling plants. However, for the drawings that follow, standard spacing requirements, as suggested by IRI have been followed.

The relatively unoccupied plot areas available on the existing site in the immediate vicinity of Unit #5 for the installation of the desired equipment are small. Some equipment items are placed on structures to allow other pieces of equipment to be placed underneath them. This way, pumps and other equipment associated with the absorber can be located under the structure. Locating the pumps under the structure has been considered acceptable because the fluids being pumped are not flammable.

Discussions with vendors suggest that it will be possible to provide insulation on the flue gas fan casing to limit noise to acceptable level. Therefore, it has been assumed that no building needs to be provided for noise reasons.

The $CO_2$ absorbers are placed adjacent to the flue gas desulfurization (FGD) system scrubbers to minimize the length of the flue gas duct feeding the bottom of the absorbers. Figure 3-14 shows the existing FGD scrubbers (2 -50% units) located just left (west) of the common stack used for Units 5/6, which is shown on the far right side of Figure 3-14. The new $CO_2$ absorbers

would be placed just to the left (west) of the existing FGD system scrubbers (far left side of Figure 3-14).

**Figure 3-14: Conesville Unit #5 Existing Flue Gas Desulfurization System Scrubbers and Stack**

The new strippers and the new let down turbine are placed ~30 m (100 ft) south of the existing Unit #5 intermediate pressure turbine just behind the existing turbine building shown in Figure 3-15. This location minimizes the length of the low-pressure steam line feeding the new LP let down turbine and the reboilers. The actual location for the new equipment would be just south of the road in the grassy area shown in the bottom part of Figure 3-15. The top of the Unit #5 boiler can be seen in the upper left side of Figure 3-15 and the duplicate Unit #6 boiler is on the upper right side.

**Figure 3-15: Conesville Unit #5 Existing Turbine Building**

The new low-pressure steam line runs from the IP/LP crossover pipe (shown in Figure 3-16) to the new let down low-pressure steam turbine, which is located near the strippers just beyond the outside wall shown in the background. The IP/LP crossover pipe will need to be modified with the addition of the steam extraction pipe to feed the let down turbine and the reboiler/reclaimer system. Additionally, a pressure control valve will need to be added downstream of the extraction point as described in Section 3.1.6.

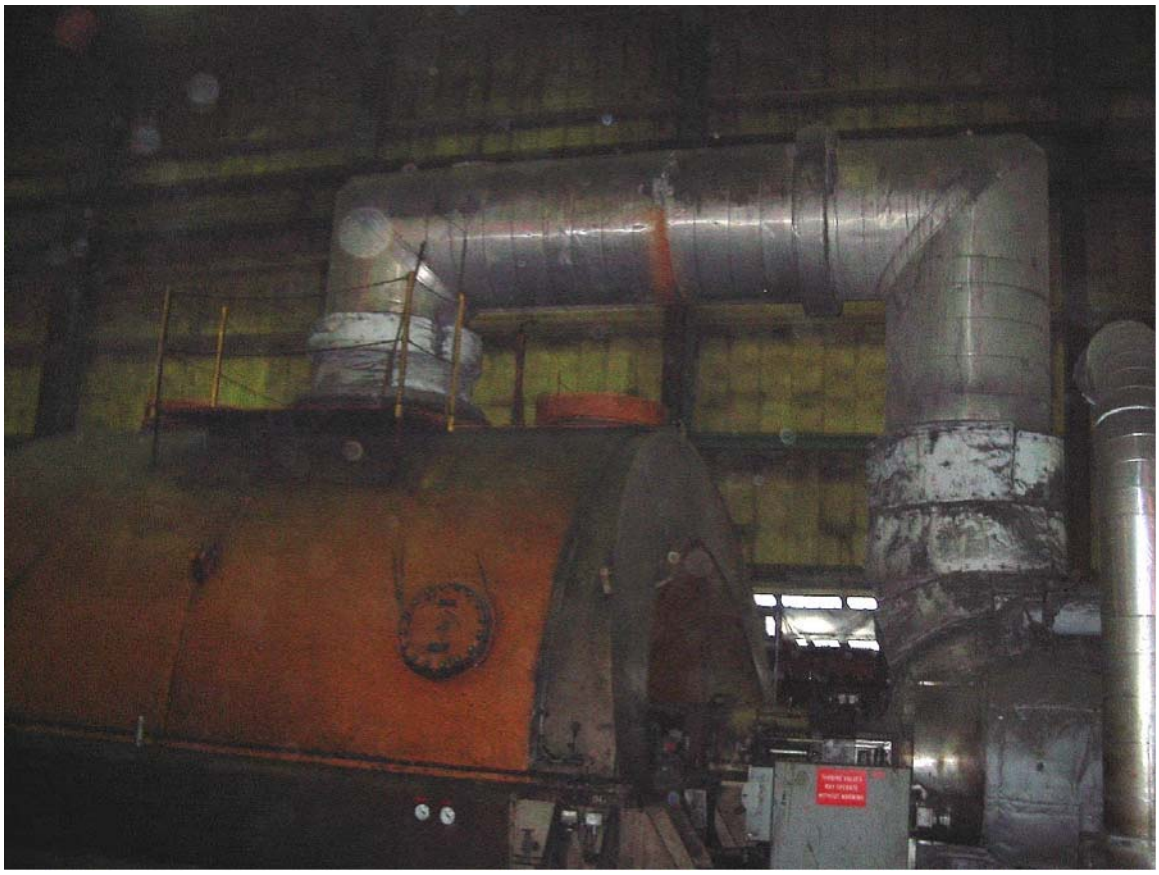

**Figure 3-16: Conesville Unit #5 Existing LP Turbine and IP/LP Crossover Pipe**

The new $CO_2$ compression and liquefaction system is located between two existing cooling tower banks as shown in Figure 3-17, ~150 m (500 ft) south of the new strippers. An abandoned warehouse must be removed to make room for the $CO_2$ Compression Facilities.

**Figure 3-17: Existing Conesville Cooling Towers & $CO_2$ Compression/Liquefaction System Location**

The corrosion inhibitor must be protected against freezing during winter. The soda ash solution will not freeze but will become very viscous when it gets cold. Therefore, a heated shed has been provided for housing the Corrosion Inhibitor and the soda ash injection packages.

### 3.1.5 Case 5/Concept A: Design and Performance of Kerr-McGee/ABB Lummus Amine $CO_2$ Removal System

Case 5 represents an update (costs and economics only) of a case (Concept A) from an earlier Alstom study (Bozzuto et al., 2001). The process design and equipment selection from the earlier study was not updated in this study. The information provided for Case 5/Concept A in this section and other sections in this report was copied or adapted from the earlier study. It should be noted that the design of Case 5 with ~96% $CO_2$ recovery (See Bozzuto et al., 2001) is not totally consistent with the design of Case 1 (90% $CO_2$ recovery) from the current study. Case 1 uses two absorbers, two strippers, and two compression trains. Whereas, Case 5, which was designed in 2000, used five absorbers, nine strippers, and seven compression trains. Additionally, Case 5 equipment, which occupies about twice as much land area, was all located about 1,500 feet from the Unit #5 stack whereas the Case 1 $CO_2$ Removal System equipment could be located much closer to the existing plant in three primary locations as explained previously.

Case 5/Concept A from this earlier study was a post-combustion system, which used an amine-based (MEA) scrubber for $CO_2$ recovery. In Concept A, coal is burned conventionally in air.

The flue gases leaving the modified FGD system (a secondary absorber is added to reduce the $SO_2$ concentration as required by the MEA system) are cooled with a direct contact cooler and ducted to the MEA system where more than 96% of the $CO_2$ is removed, compressed, and liquefied for usage or sequestration. The remaining flue gases leaving the new MEA system, consisting primarily of oxygen, nitrogen, water vapor and a relatively small amount of sulfur dioxide and carbon dioxide, are discharged to the atmosphere. The Kerr-McGee/ABB Lummus amine technology is used for the Case 5/Concept A $CO_2$ removal system.

The $CO_2$ Recovery Unit for Case 5/Concept A is comprised of the following sections:

- Flue Gas Pretreatment
- Absorption
- Stripping
- $CO_2$ Compression and Liquefaction
- $CO_2$ Drying

The flue gas pre-treatment section cools and conditions the flue gas, which is then fed to the $CO_2$ Absorber. In the Absorber, $CO_2$ is removed from the gas by contacting it, in counter current fashion, with MEA. The recovered $CO_2$ is then stripped off in the Stripper (or Regenerator) from where the lean solvent is recycled back to the Absorber. Solvent regeneration for Case 5/Concept A requires about 5.46 MJ/Tonne $CO_2$ (2,350 Btu/lbm-$CO_2$). The overhead vapor from the Stripper is cooled to condense most of the water vapor. The condensate is used as reflux in the Stripper, and the wet $CO_2$ stream is fed to the $CO_2$ Compression and Liquefaction System. Here the $CO_2$ product is compressed and dried so it can be pumped to its final destination. No specific destination has been chosen for the product pipeline. It has been assumed to end at the battery limit (outlet flange of the $CO_2$ pump) for costing purposes.

A brief description of the processing scheme for Case 5/Concept A is given in the following paragraphs. Description of the package units is indicative only and may vary for the chosen supplier of the package unit.

#### 3.1.5.1 Case 5/Concept A Process Description - $CO_2$ Removal, Compression, and Liquefaction System

This section refers to the following process flow diagrams:

- Figure 3-18: Drawing D 09484-01001R-0: Flue Gas Cooling and $CO_2$ Absorption
- Figure 3-19: Drawing D 09484-01002R-0: Solvent Stripping
- Figure 3-20: Drawing D 09484-01003R-0: $CO_2$ Compression and Liquefaction

The designs include several process trains. Only one train is shown. The note section of the PFD tells how many trains are included in the complete system. To avoid confusion, suffixes have been used to indicate parallel equipment. These are mainly for spared pumps and drier vessels in parallel. Even if there are several trains, only one drawing (typical) has been prepared to represent all of the trains. On these drawings, flow splits to the other parallel trains have been shown. Similarly, flows coming from other parallel trains and converging to a single common stream have also been shown.

A note about stream numbering convention is also necessary. The stream numbers have not been tagged with "A," "B," etc. to indicate which train they belong to. Instead, the flow rate given in the material balance for each stream is the actual flow rate for the stream within the train. The combined flow from all of the trains leaving a process step shows the total flow going to the next process step. As an example, stream 8 (Drawing D 09484-01001R-0) is the rich amine stream leaving one train of the absorber process step, and comprises 1/5 of the total rich amine. Stream 9A is the total rich amine going to the solvent stripping process step. Stream 9A appears on both the absorber and solvent stripper PFDs. After the rich amine flow sheet continuation block, the stream splits nine ways for the nine stripping trains. Then, stream 9 continues for processing on the solvent stripper PFD (Drawing D 09484-01002R-0), with 1/9 of the flow entering the rich-lean solvent exchanger (EA-2205).

**Flue Gas Pretreatment:**

The pressure profile of the $CO_2$ capture equipment is contained in the material balance. Since the flue gas pre-treatment equipment flow scheme includes a blower, the pressure profile of the existing Conesville #5 power generation equipment does not change from current operation. To force the flue gas from the secondary FGD through the $CO_2$ Absorber, the pressure of the flue gas after sulfur removal is boosted to 0.1 barg (1.5 psig) by a motor driven fan. As the power consumption of the fan is considerable, the duct size must be chosen so as not to cause excessive pressure drop over the 460 m (1,500 ft) it takes to get to the absorbers. The blower will run at constant speed. Each blower, provided as part of the boiler flue gas conditioning equipment, is equipped with its own suction and a discharge damper operated pneumatically. The suction damper controls the suction pressure to adjust for the flow variation resulting from the power plant performance. The suction pressure control will avoid any surges to blower. The discharge damper is an isolation damper.

**Direct Contact Cooling** (Refer to Figure 3-18):

The Direct Contact flue gas Cooler (DCC) is a packed column where the hot flue gas flowing up is brought into intimate contact with cold water, which is fed to the top of the bed and flows down the tower. Physically, DA-2101 and DA-2102 have been combined into a single, albeit compartmentalized tower. DA-2101 is the lower compartment and is designed to support DA-2102 so that the top head of DA-2101 is the bottom head of DA-2102. Effectively, this dividing head acts as a chimney tray with a number of upward extending chimneys, which provide passages for the flue gas to flow directly from the DCC into the Absorber.

Theoretically, a direct contact cooler is capable of cooling the gas to a very close approach in a short bed. When the hot gas enters the DCC, the gas contains water but is highly superheated. At the bottom end of the bed, the gas is quickly cooled to a temperature known as the "Adiabatic Saturation Temperature" (AST). This is the temperature the gas reaches when some of its own heat content has been used to vaporize just the exact amount of water to saturate the gas.

Up to the point when the AST is reached, the mass flow of the gas stream increases due to evaporation of water. At the AST, water vapor contained in the gas begins to condense as the gas is further cooled. And, as the gas travels up the column and is cooled further, more water is condensed. This internal refluxing increases the V/L traffic at the bottom end of the bed significantly beyond the external flows and must be considered in the hydraulic design.

The water stream that leaves the bottom of the DCC contains the water fed to the top as well as any water that has condensed out of the flue gas. The condensed water may be somewhat corrosive due to sulfur and nitrogen oxides that may be present in the flue gas. Therefore, instead of using the condensate in the process, it will be blown down from the system. For the DCC to be effective, the temperature of the leaving water must always be lower than the AST.

DCC Water Pump GA-2102 A/B circulates most of the water leaving the bottom of the DCC back to the top of the direct contact cooler. However, before sending it back to the column the water stream is first filtered in DCC Water Filter FD-2101 and then cooled in DCC Water Cooler EA-2101 against the water from the new cooling tower. Temperature of the cooled water is controlled by a cascade loop, which maintains a constant flue gas exit temperature (Absorber feed temperature). Because of the relatively low cooling water temperature at the plant, the circulating water is cooled down to 35°C (95°F), which, in turn, easily cools the gas down to 46°C (115°F).

Filtration is necessary to remove any particulate matter that may enter the DCC in the flue gas. The blowdown is taken out after the filter but before the cooler and mixed into the return water of cooler EA-2101. This way the cooler does not have to handle the extra duty that would otherwise be imposed by the blowdown stream.

**Absorption:**

$CO_2$ Absorber DA-2102 (Refer to Figure 3-18):

From the DCC, the cooled flue gas enters the bottom of the $CO_2$ Absorber and flows up the tower counter current to a stream of 20 wt% MEA solution. The LAM enters the top of the column and heats up gradually as more and more $CO_2$ is absorbed. By the time the stream leaves the bottom of the tower, it has gained approximately 16°C (28°F). The tower has been designed to remove 96% of the $CO_2$ from the incoming gas. The $CO_2$ loading in LAM is 0.215 mol $CO_2$/mol MEA, while the loading of the rich amine leaving the bottom is 0.44 mol $CO_2$/mol MEA. These values are consistent with the values reported by Rochelle (2000).

To maintain water balance in the process, it is imperative that the temperature of the LAM feed be very close to that of the feed gas stream. Thus, with feed gas temperature fixed at 46°C (115°F), the temperature of the LAM stream must also be close to 46°C (115°F), preferably within 5.5°C (10°F). If the feed gas comes in at a higher temperature than the LAM, it brings in excess moisture, which condenses in the Absorber and becomes excess water. Unless this water is purged from the system, the concentration of MEA will decrease and the performance of the system will suffer. If on the other hand, the gas feed is colder than the LAM, it heats up in the tower and picks up extra moisture that is then carried out of the system by the vent gas. The result is a water deficiency situation because more water is removed than what comes into the system.

For the reasons explained above, it is essential that both the temperature of the flue gas and that of the LAM be accurately controlled. In fact, it is best to control one temperature and adjust the temperature of the other to maintain a fixed temperature difference. The design temperature difference is approximately 5.5°C (10°F). The LAM temperature was chosen to be the “master” and the gas temperature to be the “slave.”

The rich MEA solvent solution from the bottom of the absorber at 56°C (133°F) is heated to 95.5°C (204°F) by heat exchange with lean MEA solvent solution returning from the stripping

column. The rich MEA solvent is then fed to the top of the stripping column. The lean MEA solvent solution, thus partially cooled to 62°C (143°F), is further cooled to 41°C (105°F) by exchange with cooling water and fed back to the absorber to complete the circuit.

$CO_2$ Absorber DA-2102 is a packed tower which contains two beds of structured packing and a third bed, the so-called "Wash Zone," at the very top of the column. There is also a liquid distributor at the top of each bed. The distributors for the main beds are of high-quality design. There are several reasons for selecting structured packing for this service:

- Very low pressure drop which minimized fan horsepower
- High contact efficiency / low packing height
- Good tolerance for mal-distribution in a large tower
- Smallest possible tower diameter
- Light weight

At the bottom of the tower, there is the equivalent of a chimney tray, which serves as the bottom sump for the absorber. Instead of being flat like a typical chimney tray, it is a standard dished head with chimneys. The hold-up volume of the bottom sump is sufficient to accept all the liquid held up in the packing, both in the $CO_2$ absorber and in the Wash Zone. Rich Solvent Pump GA-2103 A/D takes suction from the chimney tray.

Absorber Wash Zone (Refer to Figure 3-18):

The purpose of the Wash Zone at the top of the tower is to minimize MEA losses, both due to mechanical entrainment and also due to evaporation. This is achieved by circulating wash water in this section to scrub most of the MEA from the lean gas exiting the Absorber. The key to minimizing MEA carryover is a mist separator pad between the wash section and the absorber. But, the demister cannot stop losses of gaseous MEA carried in the flue gas. This is accomplished by scrubbing the gas with counter current flow of water. Wash Water Pump GA-2101 takes water from the bottom of the wash zone and circulates it back to the top of the bed. The circulation rate has been chosen to irrigate the packing sufficiently for efficient operation.

The key to successful scrubbing is to maintain a low concentration of MEA in the circulating water. As the MEA concentration increases, the vapor pressure of MEA also increases and, consequently, higher MEA losses are incurred. Therefore, relatively clean water must be fed to the wash zone as make-up while an equal amount of MEA laden water is drawn out. A simple gooseneck seal accomplishes this and maintains a level in the chimney tray at the bottom of the wash section. Overflow goes to the main absorber. Make-up water comes from the overhead system of the Solvent Stripper.

The lean flue gas leaving the wash zone is released to atmosphere. The top of the tower has been designed as a stack, which is made high enough to ensure proper dispersion of the existing gas.

Rich/Lean Solvent Exchanger EA-2205 (Refer to Figure 3-19):

The Rich/Lean Solvent Exchange is a plate type exchanger with rich solution on one side and lean solution on the other. The purpose of the exchanger is to recover as much heat as possible from the hot lean solvent from the bottom of the solvent stripper by heating the rich solvent feeding the Solvent Stripper. This reduces the duty of the Solvent Stripper Reboiler. This exchanger is the single most important item in the energy economy of the entire $CO_2$ Recovery Unit. For this study, 5.5°C (10°F) approach was chosen to maximize the heat recovery. An air

cooler (EC-2201) was added on the lean amine stream leaving the Solvent Stripper. This was to reduce the plot space requirement (compared to placing the air cooler downstream of the rich/lean exchanger) and overall cost of the project. A study was performed which determined that heat transfer via the plate frame lean/rich exchanger is relatively cheap, and thus justifies tight temperature approaches for the exchanger.

**Stripping:**

Solvent Stripper DA-2201 (Refer to Figure 3-19):

The solvent Stripper is a packed tower which contains two beds of structured packing and a third bed, also called "wash zone," at the very top of the column. The purpose of the Solvent Stripper is to separate the $CO_2$ (contained in the rich solvent) from the bottom stream of the $CO_2$ Absorber that is feeding the stripper. As the solvent flows down, the bottom hot vapor from the reboiler continues to strip the $CO_2$ from the solution. The final stripping action occurs in the reboiler. The hot wet vapors from the top of the stripper contain the $CO_2$, along with water vapor and solvent vapor. Solvent Stripper CW Condenser (EA-2206) cools the overhead vapors, where most of the water and solvent vapors condense. The $CO_2$ does not condense. The condensed overhead liquid and gaseous $CO_2$ are separated in a reflux drum (FA-2201). $CO_2$ flows to the $CO_2$ purification section on pressure control and the liquid (called reflux) is returned via Solvent Stripper Reflux Pump (GA-2202 A/B) to the top bed in the stripper. The top bed of the stripper is a water wash zone designed to limit the amount of solvent (MEA) vapors entering the stripper overhead system.

Solvent Stripper Reboiler EA-2201 (Refer to Figure 3-19):

The steam-heated reboiler is a vertical shell-and-tube thermo-siphon type exchanger using inside coated high flux tubing proprietary of UOP. Circulation of the solvent solution through the reboiler is natural and is driven by gravity and density differences. The reboiler tube side handles the solvent solution and the shell side handles the steam. The energy requirement for the removal of $CO_2$ is about 2.36 tonnes of steam per tonne of $CO_2$ (2.6 tons of steam per ton of $CO_2$) for Case 5/Concept A.

Solvent Reclaimer EA-2203 (Refer to Figure 3-19):

The solvent Stripper Reclaimer is a horizontal heat exchanger. Certain acidic gases, present in the flue gas feeding the $CO_2$ absorber, form compounds with the MEA in the solvent solution that cannot be regenerated by application of heat in the solvent stripper reboiler. These materials are referred to as "Heat Stable Salts" (HSS). A small slipstream of the lean solvent from the discharge of the Solvent Stripper Bottoms Pump (GA-2201 A/B/C) is fed to the Solvent Reclaimer. The reclaimer restores the MEA usefulness by removing the high boiling and non-volatile impurities, such as HSS, suspended solids, acids, and iron products from the circulating solvent solution. Caustic is added into the reclaimer to free MEA up from its bond with sulfur oxides by its stronger basic attribute. This allows the MEA to be vaporized back into the circulating mixture, minimizing MEA loss. This process is important in reducing corrosion and fouling in the solvent system. The reclaimer bottoms are cooled (EA-2204) and are supplied to a tank truck without any interim storage.

Solvent Stripper Condenser EA-2206 (Refer to Figure 3-19):

EA-2206 is a water-cooled shell and tube exchanger. The purpose of the condenser is to completely condense all components contained in the overhead vapor stream that can condense under the operating conditions, with the use of cooling water as the condensing medium. Components that do not condense include nitrogen, carbon dioxide, oxygen, nitrogen oxides, and carbon monoxide. The water vapor and MEA solvent vapor will condense and the condensed water will dissolve some carbon dioxide. This exchanger uses cooling water capacity freed up due to the reduced load on the existing surface condensers of the power plant. The same is true for the lean solvent cooler (EA-2202).

Solvent Stripper Reflux Drum, FA-2201 (Refer to Figure 3-19):

The purpose of the reflux drum is to provide space and time for the separation of liquid and gases, provide liquid hold-up volume for suction to the reflux pumps, and provide surge for the pre-coat filter. The separation is not perfect, as a small amount of carbon dioxide is left in the liquid being returned to the stripper. The $CO_2$, saturated with water, is routed to the $CO_2$ compression and liquefaction system.

Solvent Stripper Reflux Pump, GA-2202 (Refer to Figure 3-19):

This pump takes suction from the reflux drum and discharges on flow control to the stripper top tray as reflux.

Solvent Filtration Package, PA-2251, (Refer to Figure 3-19):

Pre-coat Filter PA-2251 is no ordinary filter; it is a small system. The main component is a pressure vessel that has a number of so called “leaves” through which MEA flows. The leaves have a thin (1/8 inch) coating of silica powder, which acts to filer off any solids. For the purposes of such application the powder is called “filter aid.”

To cover the leaves with the filter aid, the filter must be “pre-coated” before putting it into service. This is accomplished by mixing filter aid in water at a predetermined ratio (typically 10 wt%) to prepare slurry. This takes place in an agitated tank. A pump, which takes it suction from this tank, is then operated to pump the slurry into the filter. Provided the flow rate is high enough, the filter aid is deposited on the leaves while water passes through and can be recycled back to the tank. This is continued until the water in the tank becomes clear, indicating that all the filter aid has been transferred.

The volume of a single batch in the tank is typically 125% of the filter volume because there must be enough to fill the vessel and have some excess left over so the level in the tank is maintained and circulation can continue. In this design, water from the Stripper overhead will be used as make-up water to fill the tank. This way, the water balance of the plant is not affected.

During normal operation, it is often beneficial to add so-called “body” which is the same material as the pre-coat but may be of different particle size. The body is also slurried in water but is continually added to the filter during operation. This keeps the filter coating porous and prevents rapid plugging and loss of capacity. As the description suggests, an agitated tank is needed to prepare the batch. A metering pump is then used to add the body at a prescribed rate to the filter.

When the filter is exhausted (as indicated by pressure drop), it is taken off line so the dirty filter aid can be removed and replaced with fresh material. To accomplish this, the filter must be

drained. Pressurizing the filter vessel with nitrogen and pushing the MEA solution out of the filter accomplishes this. After this step, the filter is depressurized. Then, a motor is started to rotate the leaves so a set of scrapers will wipe the filter cake off the leaves. The loosened cake then falls off into a conveyor trough in the bottom of the vessel. This motor-operated conveyor then pushes the used cake out of the vessel and into a disposal container (oil drum or similar). The rejected cake has the consistency of toothpaste. This design is called “dry cake” filter and minimizes the amount of waste produced.

For this application, some 2% of the circulating MEA will be forced to flow through the filter. In fact, Filter Circulating Pump GA-2203 draws the liquid through the filter as it has been installed downstream of the filter. The advantage of placing the pump on the outlet side of the filter is reduced design pressure of the filter vessel and associated piping. In spite of the restriction on its suction side, ample NPSH is still available for the pump. Flow is controlled on the downstream side of the pump.

Corrosion Inhibitor (Refer to Figure 3-19):

Corrosion inhibitor chemical is injected into the process constantly to help control the rate of corrosion throughout the $CO_2$ recovery plant system. Since rates of corrosion increase with high MEA concentrations and elevated temperatures, the inhibitor is injected at appropriate points to minimize the corrosion potential. The inhibitor is stored in a tank (Part of the Package, not shown) and is injected into the system via injection pump (Part of the Package, not shown). The pump is a diaphragm-metering pump.

The selection of metallurgy in different parts of the plant is based on the performance feedback obtained from our similar commercial units in operation over a long period of time.

**$CO_2$ Compression, Dehydration, and Liquefaction:**

(Refer to Figure 30-20):

$CO_2$ from the solvent stripper reflux drum, GA-2201, is saturated with water, and is compressed in a three-stage centrifugal compressor using the air and cooling water from the new cooling tower for interstage and after-compression cooling. The interstage coolers for first and second stage are designed to supply 35°C (95°F) $CO_2$ to the compressor to minimize the compression power requirements.

Most of the water in the wet $CO_2$ stream is knocked out during compression and is removed from intermediate suction drums. A $CO_2$ drier is located after the third stage compressor to meet the water specifications for the $CO_2$ product. The water-free $CO_2$ is liquefied after the third stage of compression at about 13.4 barg (194 psig) pressure by transferring heat to propane refrigerant. $CO_2$ is then pumped (GA-2301) to the required battery limit pressure of 138 barg (2000 psig).

The propane refrigeration system requires centrifugal compressors, condensers, economizers, and evaporators to produce the required cold. The centrifugal compressor is driven by an electric motor and is used to raise the condensing temperature of the propane refrigerants above the temperature of the available cooling medium. The condenser is used to cool and condense the discharged propane vapor from the compressor back to liquid form. The economizer, which improves the refrigerant cycle efficiency, is designed to lower the temperature of the liquid propane by flashing or heat exchange. The evaporator liquefies the $CO_2$ vapor by transferring heat from the $CO_2$ vapor stream to the boiling propane refrigerant.

**Drying:**

$CO_2$ Drier, FF-2351 (Refer to Figure 3-20):

The purpose of the $CO_2$ drier is to reduce the moisture content of the $CO_2$ product to less than 20 ppmv to meet pipeline transport specifications. The drier package, FF-2351, includes four drier vessels, three of which are in service while one is being regenerated or is on standby. The package also includes a natural gas fired regeneration heater and a cooled regeneration cooler. The exchanger will have a knock out cooler downstream for separating the condensed water. The drier used as a basis for cost estimation is good for a 10-hour run length based on 3A molecular sieve.

The drier is located on the discharge side of the third stage of the $CO_2$ Compressor. Considering the cost of the vessel and the performance of the desiccant, this is the location favored by vendors. The temperature of the $CO_2$ stream entering the drier is 32°C (90°F).

Once a bed is exhausted, it is taken off line, and a slipstream of effluent from the online beds is directed into this drier after being boosted in pressure by a compressor. Before the slipstream enters the bed that is to be regenerated, it is heated to a high temperature. Under this high temperature, moisture is released from the bed and carried way in the $CO_2$ stream. The regeneration gas is then cooled to the feed gas temperature to condense any excess moisture. After this, the regeneration gas stream is mixed with the feed gas upstream of the third-stage knockout drum.

All the regeneration operations are controlled by a PLC that switches the position of several valves to direct the flow to the proper drier. It also controls the regeneration compressor, heater, and cooler. Because the regeneration gas has the same composition as the feed gas, it also contains some moisture. Thus, it is primarily the heat (“temperature swing”) that regenerates the bed.

**Process Flow Diagrams:**

The processes described above are illustrated in the following process flow diagrams:

- Figure 3-18: Drawing D 09484-01001R-0: Flue Gas Cooling and $CO_2$ Absorption
- Figure 3-19: Drawing D 09484-01002R-0: Solvent Stripping
- Figure 3-20: Drawing D 09484-01003R-0: $CO_2$ Compression and Liquefaction

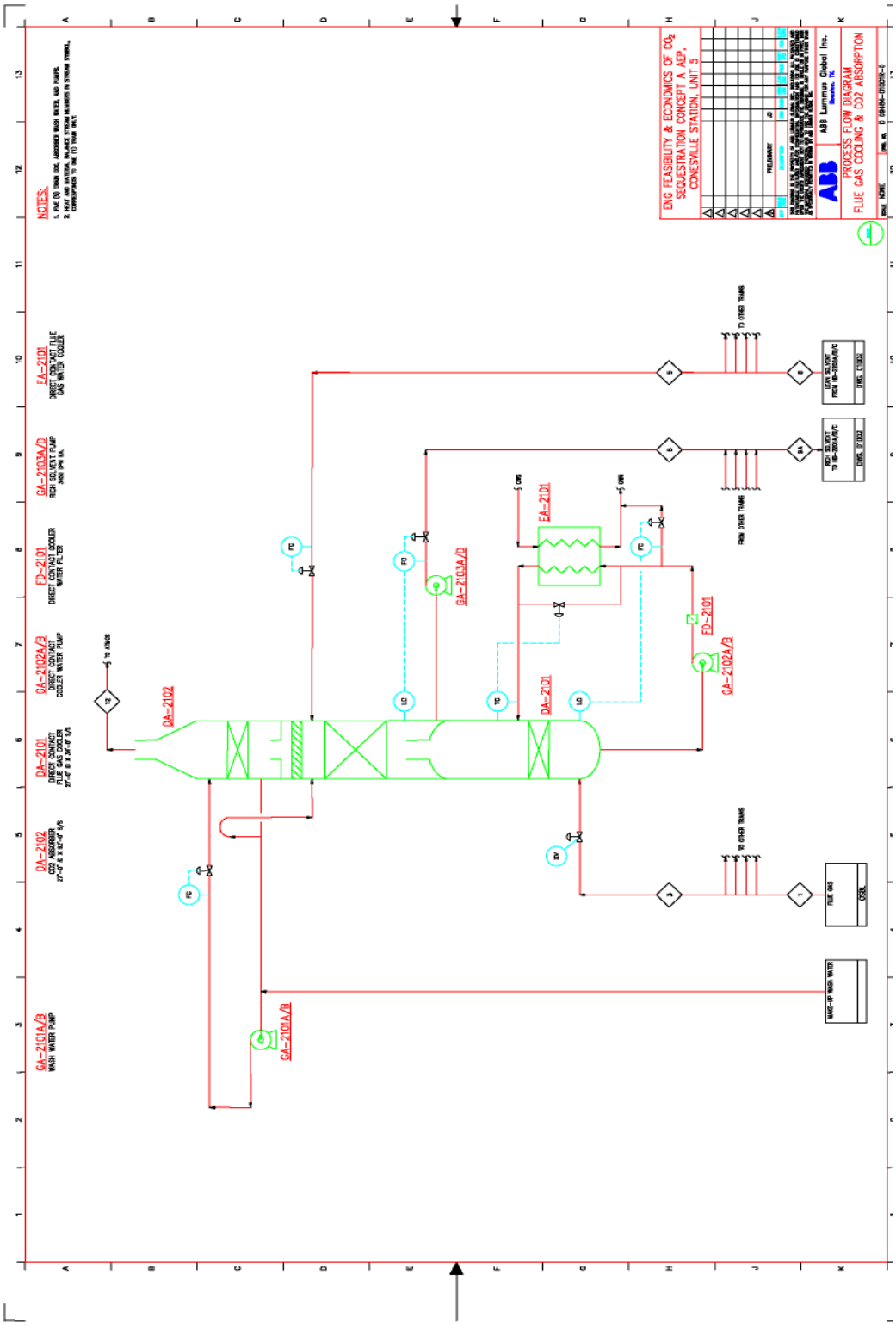


**Figure 3-18: Process Flow Diagram for Case 5/Concept A: Flue Gas Cooling and $CO_2$ Absorption**

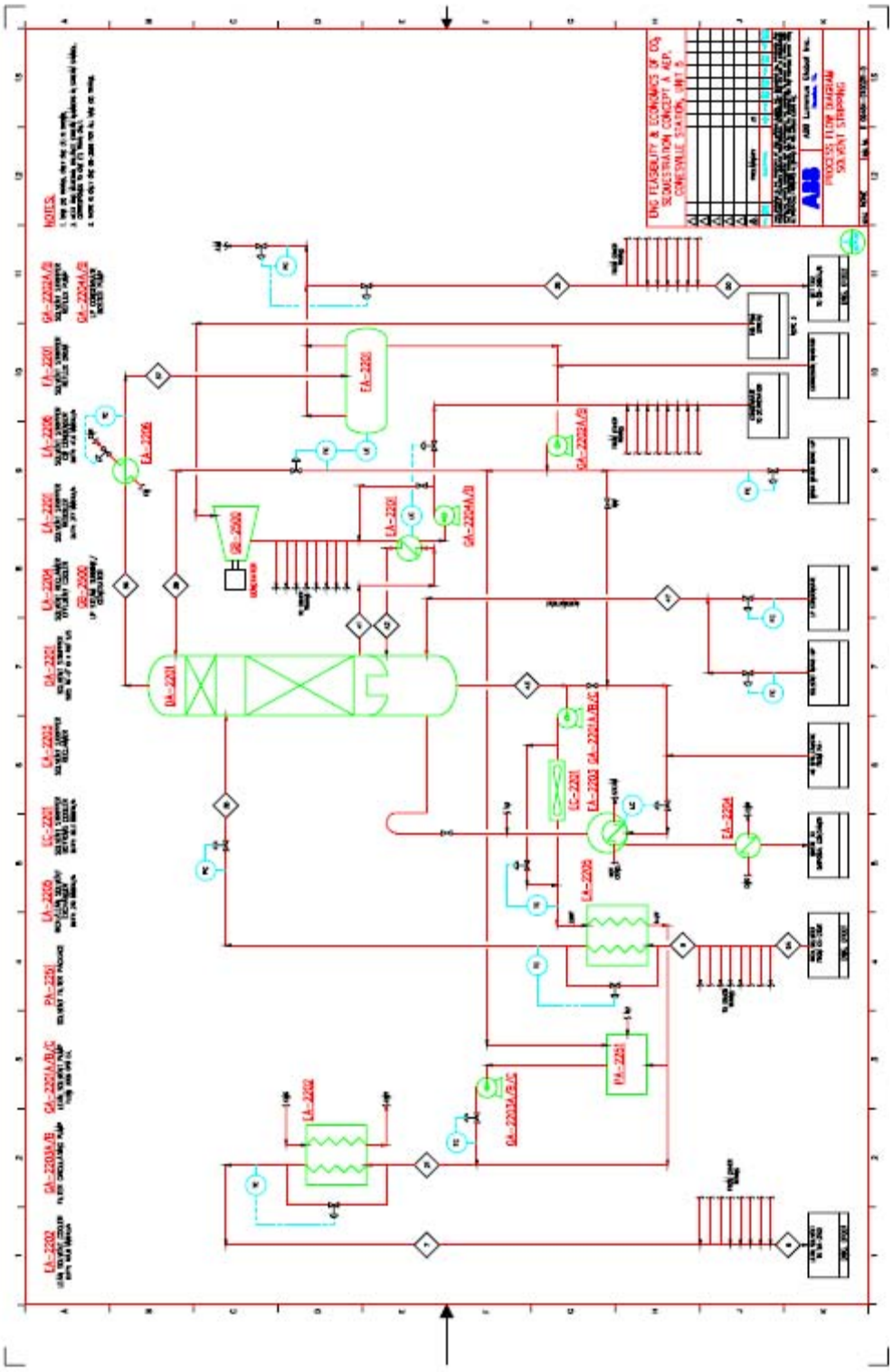

**Figure 3-19: Process Flow Diagram for Case 5/Concept A: Solvent Stripping**

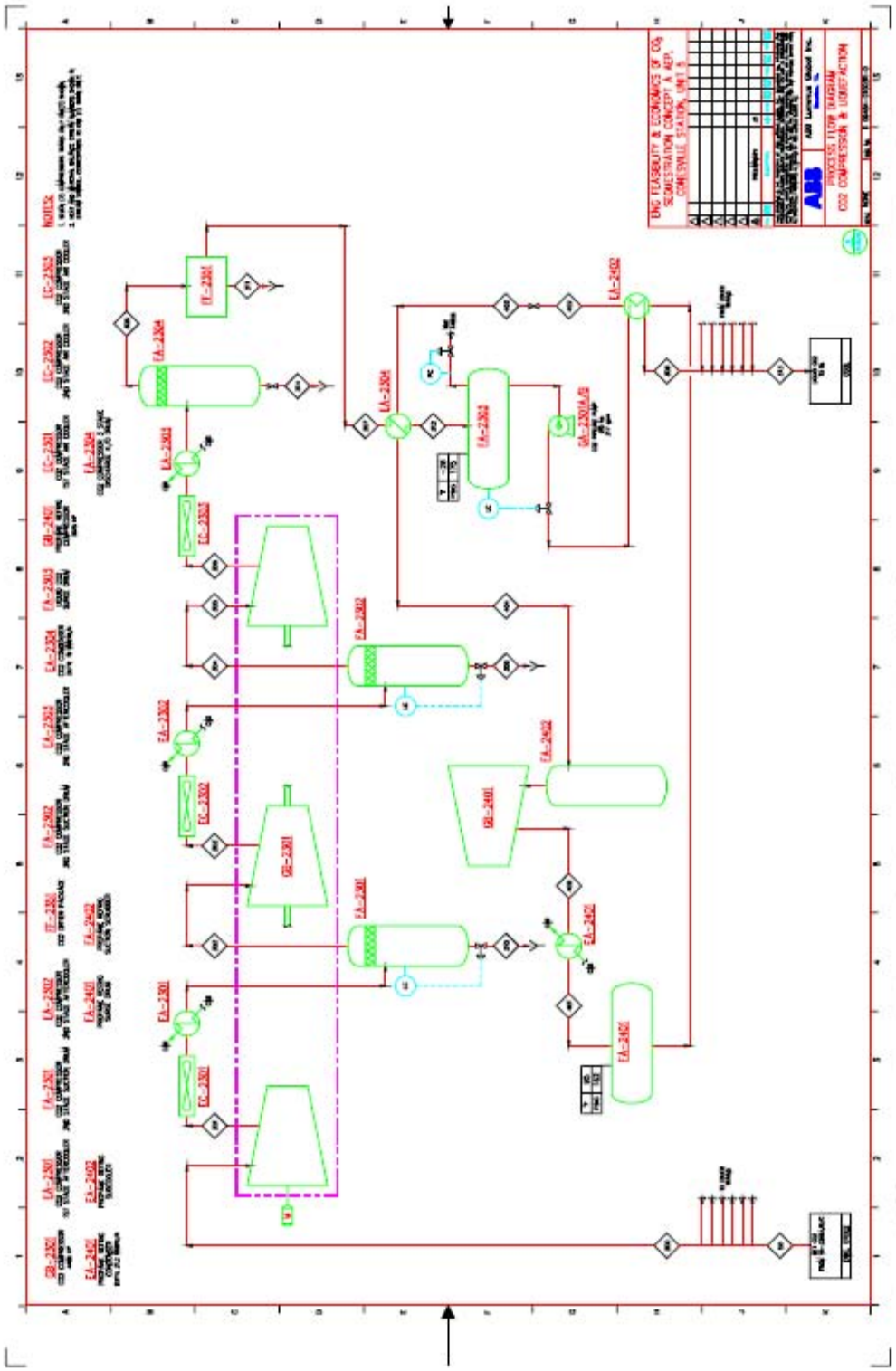

**Figure 3-20: Process Flow Diagram for Case 5/Concept A: $CO_2$ Compression, Dehydration, and Liquefaction**

#### 3.1.5.2 Case 5/Concept A Overall Material and Energy Balance - $CO_2$ Removal, Compression, and Liquefaction System

The material balances (Table 3-37 and Table 3-38) were run on two process simulators: Hysim and Amsim. Amsim was used for the Absorption/Stripping systems while Hysim was used for the conventional systems as follows:

- Flue Gas feed Hysim
- Absorber and Stripper Amsim
- Compression Hysim

The two simulators use a different reference enthalpy. They also use slightly different calculation methods for determining water saturation quantities. There is no simple way to normalize the enthalpies to the same reference. Thus, the enthalpies given in the balance are the values copied directly from the simulation. This creates a discontinuity at the interface between Hysim and Amsim simulations - take for example the wet $CO_2$ flow to the $CO_2$ compressor. The stream comes from the Stripper overhead system, which was simulated with Amsim and enters the $CO_2$ compressor, which was simulated using Hysim. For this particular stream, the enthalpy value given in the balance comes from Hysim. Lastly, convergence algorithms allow the programs to slightly alter input streams. Thus, some leniency and care should be exercised when using such interface streams for heat balance checks. This section contains heat and material balances for Case 5/Concept A.

## Table 3-37: Material and Energy Balance for Case 5/Concept A Amine System

| | | | | | | | | | | | | |
|---|---|---|---|---|---|---|---|---|---|---|---|---|
| TEMPERATURE F | 150 | 115 | 115 | 115 | 115 | 105 | 133 | 106 | 133 | 133 | 133 | 204 |
| PRESSURE PSIA | 16.5 | 16.5 | 16.5 | 16.5 | 16.5 | 14.9 | 16.5 | 14.9 | 16.5 | 16.5 | 16.5 | 16.5 |
| COMPONENTS | | | | | | | | | | | | |
| CO2 (Carbon Dioxide) LbMol/HR | 19,684.00 | 3,936.80 | 3,936.80 | 3,936.23 | 0.14 | 3,585.44 | 7,380.58 | 141.1 | 36,902.89 | 4,100.32 | 4,100.32 | 4,100.32 |
| MEA LbMol/HR | 0 | 0 | 0 | 0 | 0 | 16,765.89 | 16,763.07 | 2.82 | 83,815.36 | 9,312.82 | 9,312.82 | 9,312.82 |
| H2O (Water) LbMol/HR | 24,551.00 | 4,910.20 | 4,910.20 | 2,544.80 | 2,365.50 | 227,379.00 | 228,257.60 | 1,666.30 | 1,141,288.00 | 126,809.80 | 126,809.80 | 126,809.80 |
| C1 (Methane) LbMol/HR | 0 | 0 | 0 | 0 | 0 | 0 | 0 | 0 | 0 | 0 | 0 | 0 |
| N2 (Nitrogen) LbMol/HR | 105,079.00 | 21,015.80 | 21,015.80 | 21,016.14 | 0.02 | 0 | 1.75 | 21,014.40 | 8.76 | 0.97 | 0.97 | 0.97 |
| O2 (Oxygen) LbMol/HR | 4,518.00 | 903.6 | 903.6 | 903.61 | 0 | 0 | 0.14 | 903.47 | 0.7 | 0.08 | 0.08 | 0.08 |
| Total Molar Flow Rate LbMol/HR | 153,832.00 | 30,766.40 | 30,766.40 | 28,400.80 | 2,365.60 | 247,730.40 | 252,403.20 | 23,728.10 | 1,262,016.00 | 140,224.00 | 140,224.00 | 140,224.00 |
| VAPOR | | | | | | | | | | | | |
| MASS FLOW RATE LbMol/HR | 446,600,625 | 3,572,805 | 3,572,805 | 3,397,068 | | | | 2,438,328 | | | | |
| STD. VOL. FLOW RATE MMSCFD | 1401.1 | 280.22 | 280.22 | 258.66 | | | | 216.1 | | | | |
| ACTUAL VOL. FLOW RATE MMACFD | 1378 | 275.6 | 275.6 | 254.5 | | | | 231.72 | | | | |
| MOLECULAR WEIGHT MW | 285.821 | 57.1642 | 57.1642 | 58.9234 | | | | 55.1246 | | | | |
| STD. DENSITY Lb/Ft3 | 0.765 | 0.153 | 0.153 | 0.1576 | | | | 0.1354 | | | | |
| GAS COMPRESSIBILITY | 0 | 0 | 0 | 0 | | | | 0 | | | | |
| VISCOSITY cP | 0 | 0 | 0 | 0 | | | | 0 | | | | |
| HEAT CAPACITY Btu/Lb-F | 0 | 0 | 0 | 0 | | | | 0 | | | | |
| THERMAL CONDUCTIVITY Btu/Hr-ft-F | 127.958 | 25.5916 | 25.5916 | 27.7192 | | | | 1.1892 | | | | |
| LIQUID | | | | | | | | | | | | |
| MASS FLOW RATE Lb/Hr | | | | | 85,263 | 10,557,848 | 10,923,302 | | 273,082,551 | 3,371,390 | 3,371,390 | 3,371,390 |
| STD. VOL. FLOW RATE GPM | | | | | 85.26 | 10252.78 | 10352.54 | | 51762.7 | 5751.41 | 5751.41 | 5751.41 |
| ACTUAL VOL. FLOW RATE GPM | | | | | 86.02 | 10308.54 | 10467.22 | | 52336.1 | 5815.12 | 5815.12 | 5940.3 |
| MOLECULAR WEIGHT MW | | | | | 18.02 | 21.31 | 21.64 | | 21.64 | 21.64 | 21.64 | 21.64 |
| STD. DENSITY Lb/Ft3 | | | | | 62.34 | 64.19 | 65.77 | | 65.77 | 65.77 | 65.77 | 65.77 |
| VISCOSITY cP | | | | | 0.6383 | 0.8608 | 0.6868 | | 0.6868 | 0.6868 | 0.6868 | 0.3544 |
| HEAT CAPACITY Btu/Lb-F | | | | | 0.9948 | 0.9357 | 0.9221 | | 0.9221 | 0.9221 | 0.9221 | 0.9325 |
| THERMAL CONDUCTIVITY Btu/Hr-ft-F | | | | | 0.3979 | 0.3557 | 0.3557 | | 0.3557 | 0.3557 | 0.3557 | 0.3557 |

| STREAM NAME | Rich Amine Feed to Regenerator | Regenerator Overhead Vapor | RegeneratorCon de nser Outlet | Acid Gas | RegeneratorReflux Liquid | Liquid to Regenerator Reboiler | RegeneratorRebo il er Vapor | Lean Amine from RegeneratorReboi l er | Lean Amine from Lean/Rich Heat Exchanger | Lean Amine to Cooler | Amine and Water Make-up | Total Acid Gas |
|---|---|---|---|---|---|---|---|---|---|---|---|---|
| STREAM NO. | 35 | 36 | 37 | 38 | 39 | 41 | 42 | 43 | 21 | 21 | 47 | 24 |
| LIQUID FRACTION | 1 | 0 | 1 | 0 | 1 | 1 | 0 | 1 | 1 | 1 | 1 | 0 |
| TEMPERATURE F | 209 | 209 | 105 | 105 | 105 | 248 | 250 | 250 | 173 | 173 | 68 | 105 |
| PRESSURE PSIA | 28 | 26 | 23 | 23 | 23 | 29.8 | 30 | 30 | 30 | 30 | 30 | 23 |
| COMPONENTS | | | | | | | | | | | | |
| CO2 (Carbon Dioxide) LbMol/Hr | 4,100.32 | 2,081.06 | 2,081.06 | 2,079.81 | 1.27 | 2,701.12 | 680.61 | 2,020.51 | 2,020.51 | 2,020.51 | 0 | 18,718.28 |
| MEA | 9,312.82 | 9.92 | 9.92 | 0.01 | 9.9 | 9,381.40 | 68.6 | 9,312.81 | 9,312.81 | 9,314.38 | 1.58 | 0.11 |
| H2O (Water) LbMol/Hr | 126,809.80 | 2,128.70 | 2,128.70 | 105.7 | 2,023.00 | 137,717.90 | 11,013.80 | 126,704.00 | 126,704.00 | 126,321.80 | -382.3 | 951.3 |
| C1 (Methane) LbMol/Hr | 0 | 0 | 0 | 0 | 0 | 0 | 0 | 0 | 0 | 0 | 0 | 0 |
| N2 (Nitrogen) LbMol/Hr | 0.97 | 0.97 | 0.97 | 0.97 | 0 | 0 | 0 | 0 | 0 | 0 | 0 | 8.76 |
| O2 (Oxygen) | 0.08 | 0.08 | 0.08 | 0.08 | 0 | 0 | 0 | 0 | 0 | 0 | 0 | 0.7 |
| Total Molar Flow Rate | 140,224.00 | 4,220.70 | 4,220.70 | 2,186.60 | 2,034.10 | 149,800.30 | 11,763.00 | 138,037.30 | 138,037.30 | 137,656.70 | -380.7 | 19,679.20 |
| VAPOR | | | | | | | | | | | | |
| MASS FLOW RATE Lb/Hr | | 221,688 | | 166,131 | | | 429,305 | | | | | 121,109,333 |
| STD. VOL. FLOW RATE MMSCFD | | 38.44 | | 19.91 | | | 107.13 | | | | | 179.2 |
| ACTUAL VOL. FLOW RATE MMACFD | | 27.73 | | 13.72 | | | 70.62 | | | | | 123.5 |
| MOLECULAR WEIGHT MW | | 34.37 | | 47.5 | | | 21.97 | | | | | 427.46 |
| STD. DENSITY Lb/Ft3 | | 0.12 | | 0.18 | | | 0.09 | | | | | 1.62 |
| GAS COMPRESSIBILITY | | 0 | | 0 | | | 0 | | | | | 0 |
| VISCOSITY cP | | 0 | | 0 | | | 0 | | | | | 0 |
| HEAT CAPACITY Btu/Lb-F | | 0 | | 0 | | | 0 | | | | | 0 |
| THERMAL CONDUCTIVITY Btu/Hr-ft-F | | 54.78 | | 105.69 | | | 6.43 | | | | | 951.17 |
| LIQUID | | | | | | | | | | | | |
| MASS FLOW RATE Lb/Hr | 3,371,390 | | 145,088 | | 41,234 | 3,525,978 | | 3,267,542 | 3,267,542 | 3,259,998 | -7,547 | |
| STD. VOL. FLOW RATE MMSCFD | 5751.41 | | 247.18 | | 73.13 | 6116.13 | | 5709.78 | 5709.78 | 5696.53 | -13.59 | |
| ACTUAL VOL. FLOW RATE MMACFD | 5951.79 | | 248.73 | | 73.61 | 6434.23 | | 6011.14 | 5839.38 | 5825.79 | -13.6 | |
| MOLECULAR WEIGHT MW | 21.64 | | 30.94 | | 18.24 | 21.18 | | 21.3 | 21.3 | 21.31 | 17.84 | |
| STD. DENSITY Lb/Ft3 | 65.77 | | 65.86 | | 63.27 | 64.69 | | 64.21 | 64.21 | 64.21 | 62.31 | |
| VISCOSITY cP | 0.3401 | | 0.6888 | | 0.6655 | 0.2592 | | 0.2564 | 0.4548 | 0.4549 | 1.2839 | |
| HEAT CAPACITY Btu/Lb-F | 0.9324 | | 0.4962 | | 0.9902 | 0.9481 | | 0.9491 | 0.9513 | 0.9513 | 0.9454 | |
| THERMAL CONDUCTIVITY Btu/Hr-ft-F | 0.3557 | | 0.3945 | | 0.3944 | 0.3583 | | 0.3557 | 0.3557 | 0.3557 | 0.3664 | |

## Table 3-38: Material and Energy Balance for Case 5/Concept A $CO_2$ Compression, Dehydration and Liquefaction System

| STREAM NAME | Total Acid gas from strippers | To train A liquefaction | First stage discharge | To second stage | First stage water KO | 2nd stage discharge | To 3rd stage | 2nd stage water KO | From 3rd stage | To drier | 3rd stage water KO |
|---|---|---|---|---|---|---|---|---|---|---|---|
| **STREAM NO.** | **300** | **300** | **301** | **302** | **310** | **303** | **304** | **309** | **306** | **305** | **314** |
| VAPOR FRACTION Molar | 1.000 | 1.000 | 1.000 | 1.000 | 0.000 | 1.000 | 1.000 | 0.000 | 1.000 | 1.000 | 0.000 |
| TEMPERATURE F | 105 | 105 | 230 | 95 | 95 | 236 | 95 | 95 | 282 | 90 | 90 |
| PRESSURE PSIG | 4 | 4 | 25 | 19 | 19 | 62 | 56 | 56 | 191 | 185 | 185 |
| MOLAR FLOW RATE LbMol/Hr | 19,679.08 | 2 ,811.30 | 2,811.30 | 2,743.70 | 67.60 | 2,743.70 | 2,708.50 | 35.19 | 2,708.50 | 2,686.56 | 21.94 |
| MASS FLOW RATE Lb/Hr | 841,192 | 120,170 | 120,170 | 118,951 | 1,219 | 118,951 | 118,315 | 636 | 118,315 | 117,917 | 398 |
| ENERGY Btu/Hr | 8.79E+07 | 1.26E+07 | 1.58E+07 | 1.58E+07 | -9.79E+05 | 1.56E+07 | 1.17E+07 | -5.09E+05 | 1.64E+07 | 1.10E+07 | -3.18E+05 |
| COMPOSITON Mol % | | | | | | | | | | | |
| $CO_2$ | 95.12% | 95.12% | 95.12% | 97.46% | 0.09% | 97.46% | 98.72% | 0.18% | 98.72% | 99.52% | 0.54% |
| $H_2O$ | 4.83% | 4.83% | 4.83% | 2.49% | 99.91% | 2.49% | 1.23% | 99.82% | 1.23% | 0.42% | 99.46% |
| Nitrogen | 0.04% | 0.04% | 0.04% | 0.05% | 0.00% | 0.05% | 0.05% | 0.00% | 0.05% | 0.05% | 0.00% |
| Ammonia | 0.00% | 0.00% | 0.00% | 0.00% | 0.00% | 0.00% | 0.00% | 0.00% | 0.00% | 0.00% | 0.00% |
| Propane | 0.00% | 0.00% | 0.00% | 0.00% | 0.00% | 0.00% | 0.00% | 0.00% | 0.00% | 0.00% | 0.00% |
| Oxygen | 0.00% | 0.00% | 0.00% | 0.00% | 0.00% | 0.00% | 0.00% | 0.00% | 0.00% | 0.00% | 0.00% |
| VAPOR | | | | | | | | | | | |
| MOLAR FLOW RATE LbMol/Hr | 19,679.10 | 2,811.30 | 2,811.30 | 2,743.70 | -- | 2,743.70 | 2,708.50 | -- | 2,708.50 | 2,686.60 | -- |
| MASS FLOW RATE Lb/Hr | 841,192 | 120,170 | 120,170 | 118,951 | -- | 118,951 | 118,315 | -- | 118,315 | 117,917 | -- |
| STD VOL. FLOW MMSCFD | 179.23 | 25.6 | 25.6 | 24.99 | - | 24.99 | 24.67 | - | 24.67 | 24.47 | - |
| ACTUAL VOL. FLOW ACFM | 103,907.68 | 14,843.95 | 8,749.53 | 8,063.83 | - | 4,417.63 | 3,728.32 | - | 1,698.44 | 1,224.03 | - |
| MOLECULAR WEIGHT MW | 42.75 | 42.75 | 42.75 | 43.35 | - | 43.35 | 43.68 | - | 43.68 | 43.89 | - |
| DENSITY Lb/Ft3 | 0.13 | 0.13 | 0.23 | 0.25 | -- | 0.45 | 0.53 | -- | 1.16 | 1.61 | -- |
| VISCOSITY cP | 0.0149 | 0.0149 | 0.0187 | 0.0149 | -- | 0.0193 | 0.0152 | -- | 0.0212 | 0.0154 | -- |
| HYDROCARBON LIQUID | | | | | | | | | | | |
| MOLAR FLOW RATE LbMol/Hr | -- | -- | -- | -- | -- | -- | -- | -- | -- | -- | -- |
| MASS FLOW RATE Lb/Hr | -- | -- | -- | -- | -- | -- | -- | -- | -- | -- | -- |
| STD VOL. FLOW MMSCFD | - | - | - | - | - | - | - | - | - | - | - |
| ACTUAL VOL. FLOW ACFM | - | - | - | - | - | - | - | - | - | - | - |
| MOLECULAR WEIGHT MW | - | - | - | - | - | - | - | - | - | - | - |
| DENSITY Lb/Ft3 | - | - | - | - | - | - | - | - | - | - | - |
| VISCOSITY cP | - | - | - | - | - | - | - | - | - | - | - |
| SURFACE TENSION Dyne/Cm | - | - | - | - | - | - | - | - | - | - | - |

| STREAM NAME | From drier / To condenser | Water from drier | From condenser | From product pump | From Train A liquefaction | To pipeline | Refrig compressor discharge | From refrig condenser | From subcooler | Refrig to $CO_2$ condenser | Refrig from $CO_2$ condenser |
|---|---|---|---|---|---|---|---|---|---|---|---|
| **STREAM NO.** | **307** | **311** | **312** | **308** | **309** | **313** | **400** | **401** | **402** | **403** | **404** |
| VAPOR FRACTION Molar | 1.000 | 0.726 | 0.000 | 0.000 | 0.000 | 0.000 | 1.000 | 0.000 | 0.000 | 0.173 | 0.996 |
| TEMPERATURE F | 90 | 380 | -26 | -12 | 82 | 82 | 149 | 95 | 24 | -31 | -31 |
| PRESSURE PSIG | 180 | 180 | 2,003 | 2,000 | 2,000 | 2,000 | 169 | 162 | 159 | 5 | 5 |
| MOLAR FLOW RATE LbMol/Hr | 2,675.15 | 11.41 | 2,675.15 | 2,675.15 | 2,675.15 | 18,726.05 | 2,928.57 | 2,928.57 | 2,928.57 | 2,928.57 | 2,928.57 |
| MASS FLOW RATE Lb/Hr | 117,711 | 206 | 117,711 | 117,711 | 117,711 | 823,979 | 129,141 | 129,141 | 129,141 | 129,141 | 129,141 |
| ENERGY Btu/Hr | 1.10E+07 | 2.51E+04 | -8.07E+06 | -7.29E+06 | -1.36E+06 | -9.50E+06 | 1.81E+07 | 7.63E+05 | -5.17E+06 | -5.17E+06 | 1.39E+07 |
| COMPOSITON Mol % | | | | | | | | | | | |
| $CO_2$ | 99.95% | 0.00% | 99.95% | 99.95% | 99.95% | 99.95% | 0.00% | 0.00% | 0.00% | 0.00% | 0.00% |
| $H_2O$ | 0.00% | 100.00% | 0.00% | 0.00% | 0.00% | 0.00% | 0.00% | 0.00% | 0.00% | 0.00% | 0.00% |
| Nitrogen | 0.05% | 0.00% | 0.05% | 0.05% | 0.05% | 0.05% | 0.00% | 0.00% | 0.00% | 0.00% | 0.00% |
| Ammonia | 0.00% | 0.00% | 0.00% | 0.00% | 0.00% | 0.00% | 0.00% | 0.00% | 0.00% | 0.00% | 0.00% |
| Propane | 0.00% | 0.00% | 0.00% | 0.00% | 0.00% | 0.00% | 100.00% | 100.00% | 100.00% | 100.00% | 100.00% |
| Oxygen | 0.00% | 0.00% | 0.00% | 0.00% | 0.00% | 0.00% | 0.00% | 0.00% | 0.00% | 0.00% | 0.00% |
| VAPOR | | | | | | | | | | | |
| MOLAR FLOW RATE LbMol/Hr | 2 ,675.2 | 8 .3 | -- | -- | -- | -- | 2,928.6 | -- | -- | 506.5 | 2 ,915.8 |
| MASS FLOW RATE Lb/Hr | 1 17,711 | 1 49 | -- | -- | -- | -- | 129,141 | -- | -- | 22,334 | 1 28,577 |
| STD VOL. FLOW MMSCFD | 2 4.36 | 0 .08 | -- | -- | -- | -- | 2 6.67 | -- | -- | 4 .61 | 2 6.56 |
| ACTUAL VOL. FLOW ACFM | 1 ,253.44 | 5 .96 | -- | -- | -- | -- | 3,573.03 | -- | -- | 1,860.34 | 10,709.92 |
| MOLECULAR WEIGHT MW | 4 4.00 | 1 8.02 | -- | -- | -- | -- | 44.10 | -- | -- | 4 4.10 | 4 4.10 |
| DENSITY Lb/Ft3 | 1.57 | 0 .42 | -- | -- | -- | -- | 0.6 | -- | -- | 0 .20 | 0.2 |
| VISCOSITY cP | 0 .0155 | 0 .0154 | -- | -- | -- | -- | 0.0082 | -- | -- | 0 .0065 | 0.0065 |
| HYDROCARBON LIQUID | | | | | | | | | | | |
| MOLAR FLOW RATE LbMol/Hr | -- | -- | 2,675.15 | 2,675.15 | 2,675.15 | 18,726.05 | -- | 2,928.57 | 2,928.57 | 2,422.10 | 12.79 |
| MASS FLOW RATE Lb/Hr | | | 117,711.33 | 117,711.33 | 117,711.33 | 823,979.29 | -- | 129,141.22 | 129,141.22 | 106,807.22 | 563.95 |
| STD VOL. FLOW MMSCFD | - | - | 9,766 | 9,766 | 9,766 | 68,360 | -- | 17,452 | 17,452 | 14,434 | 76 |
| ACTUAL VOL. FLOW ACFM | - | - | 217.05 | 213.53 | 289.79 | 2,028.56 | -- | 541.52 | 480.49 | 372.27 | 1.97 |
| MOLECULAR WEIGHT MW | - | - | 67.61 | 68.73 | 50.64 | 50.64 | -- | 29.73 | 33.51 | 35.77 | 35.77 |
| DENSITY Lb/Ft3 | - | - | 44 | 44 | 44 | 44 | -- | 44.1 | 44.1 | 44.1 | 44.1 |
| VISCOSITY cP | - | - | 0.1752 | 0.1607 | 0.062 | 0.062 | -- | 0.0906 | 0.1332 | 0.1823 | 0.1823 |
| SURFACE TENSION Dyne/Cm | - | - | 16.07 | 14.07 | 0.86 | 0.86 | -- | 5.74 | 10.51 | 14.49 | 14.49 |

### 3.1.5.3 Case 5/Concept A Equipment List – $CO_2$ Removal, Compression, and Liquefaction

Complete equipment data summary sheets for Case 5/Concept A are provided in Appendix II. These equipment lists have been presented in the so-called "short spec" format, which provides adequate data for developing a factored cost estimate.

It should be noted that although Cases 1 and 5 both capture about the same amount of $CO_2$ (90% and 96% respectively), the design of Case 5 (See Bozzuto et al., 2001), which was developed in 2000, is not totally consistent with the design of Case 1 done in the current study. Table 3-39, which summarizes the major equipment categories for Case 1 and 5, shows that Case 1 uses two absorber trains, two stripper trains, and two compression trains. Case 5, which was designed in 2000, uses five absorber trains, nine stripper trains, and seven compression trains. Additionally, the total number of heat exchangers in the system for Case 1 is 58 whereas for Case 5 is 131. Because of these differences, Case 1 is able to take advantage of significant economy of scale effects for equipment cost with the larger equipment sizes in each train as compared to Case 5. Additionally, Case 5 equipment was all located about 457 m (1,500 ft) from the Unit #5 stack, which also increased the costs of Case 5 relative to Case 1.

**Table 3-39: Equipment Summary $CO_2$ Removal, Compression, and Liquefaction System (Cases 1, 5)**

| | Case 1 (90% recovery) | | Case 5 (96% recovery) | |
|---|---|---|---|---|
| **Compressors** | No. | HP each | No. | HP each |
| $CO_2$ Compressor | 2 | 15,600 | 7 | 4,500 |
| Propane Compressor | 2 | 11,700 | 7 | 3,100 |
| LP Let Down Turbine | 1 | 60,800 | 1 | 82,300 |
| **Towers/Internals** | No. | ID/Height (ft) | No. | ID/Height (ft) |
| Absorber/Cooler | 2 | 34 / 126 | 5 | 27 / 126 |
| Strippers | 2 | 22 / 50 | 9 | 16 / 50 |
| **Heat Exchangers** | No. | $10^6$-Btu/Hr ea. | No. | $10^6$-Btu/Hr ea. |
| Reboilers | 10 | 120.0 | 9 | 217.0 |
| Solvent Stripper CW Condenser | 12 | 20.0 | 9 | 42.0 |
| Other Heat Exchangers / Avg Duty | 36 | 61.0 | 113 | 36.0 |
| **Total Heat Exchangers / Avg Duty** | 58 | 101.0 | 131 | 56.6 |

### 3.1.5.4 Case 5/Concept A Consumption of Utilities - $CO_2$ Removal, Compression, and Liquefaction System

The following utilities from OSBL are required in the $CO_2$ Recovery Unit.

- Steam
- High Pressure (HP) Steam
- Low Pressure (LP) Steam
- Water
- Demineralized Water
- Raw Water (Fresh Water, Cooling tower make-up)

- Potable Water (hoses, etc.)
- Air
- Plant Air (maintenance, etc.)
- Instrument Air
- Electric Power
- Natural Gas

Note: The $CO_2$ Recovery Plant includes cooling water pumps that supply all the cooling water required by this unit. Case 5/Concept A utility consumption is presented in Table 3-40 and the auxiliary power consumption is shown in Table 3-41.

**Table 3-40: Utility Consumption for Case 5/Concept A**

| Utility | Amount Consumed | Units |
|---|---|---|
| Natural Gas | 0.42 | $10^6$ SCFD |
| Steam (180 psig) | 1,950,000 | Lb/hr |
| Cooling water | 22,000 | Gpm |

**Table 3-41: Auxiliary Power Usage for Case 5/Concept A**

| Number of Trains | Tag no. | Description | Number Operating per train | Power (ea) w/ 0.95 motor eff (kW) | Total all trains (kW) |
|---|---|---|---|---|---|
| 5 | GA-2101 A/B | Wash Water Pump | 1 | 19 | 95 |
| 5 | GA-2102 A/B | Direct Contact Cooler Water Pump | 1 | 32 | 162 |
| 5 | GA-2103 A/B/C/D | Rich Solvent Pump | 3 | 146 | 729 |
| 9 | GA-2201 A/B/C | Lean Solvent Pump | 2 | 117 | 1,053 |
| 9 | GA-2202 A/B | Solvent Stripper Reflux Pump | 1 | 3 | 28 |
| 9 | GA-2203 A/B | Filter Circ. Pump | 1 | 12 | 107 |
| 7 | GA-2301 A/B | $CO_2$ Pipeline Pump | 1 | 184 | 1,288 |
| 9 | GA-2204 A/B | LP condensate booster pump | 1 | 74 | 667 |
| 3 | GA-2501 | Caustic metering pump | 1 | 0 | 0 |
| 7 | GB-2301 | $CO_2$ Compressor (Motor driven) | 1 | 3,557 | 24,901 |
| 7 | GB-2401 | Propane Refrigeration Compressor | 1 | 2,395 | 16,765 |
| 1 | GB-2500 | LP steam turbine/ generator | NA | NA | NA |
| 7 | EC-2301 | $CO_2$ Compressor 1st stage Air Cooler | 1 | 9 | 66 |
| 7 | EC-2302 | $CO_2$ Compressor 2nd stage Air Cooler | 1 | 10 | 69 |
| 7 | EC-2303 | $CO_2$ Compressor 3rd stage Air Cooler | 1 | 15 | 103 |
| 9 | EC-2201 | Solvent Stripper Bottoms Cooler | 1 | 256 | 2,305 |
| 7 | PA-2351 | $CO_2$ Drier Package | 1 | 151 | 1054 |
| 1 | PA-2551 | Cooling Tower | 1 | 962 | 962 |
| | | **Total Power** | | | **50,355** |

### 3.1.5.5 Case 5/Concept A Consumption of Chemicals and Desiccants - $CO_2$ Removal, Compression, and Liquefaction System

The consumption of chemicals and desiccants for Case 5/Concept A are identified in Table 3-42.

**Table 3-42: Chemicals and Desiccants Consumption for Case 5/Concept A**

| Chemical | Consumption per day (lbm) |
|---|---|
| Caustic (100%) | 3600 |
| MEA | 14000 |
| Corrosion inhibitor | 1140 |
| Diatomaceous earth | 916 |
| Molecular sieve | 257 |
| Sodium hypochlorite | 3590 |
| Sodium bisulfite | 13.8 |

This total does not include chemicals provided by the cooling tower service people nor disposal of waste. These are handled as a component of operating costs referred to as contracted services and waste handling, respectively.

### 3.1.5.6 Case 5/Concept A Design Considerations - $CO_2$ Removal, Compression, and Liquefaction System

The following parameters were optimized for Case 5/Concept A with the objective of reducing the overall unit cost and energy requirements.

- Solvent Concentration
- Lean Amine Loading
- Rich Amine Loading
- Absorber Temperature
- Rich /Lean Exchanger approach
- $CO_2$ Compressor interstage temperatures
- $CO_2$ Refrigeration Pressure and Temperature

A minimum of 90% $CO_2$ recovery was targeted. The above parameters were adjusted to increase the recovery until a significant increase in equipment size and/or energy consumption was observed. AES Corporation owns and operates a 200 STPD food grade $CO_2$ production plant in Oklahoma. This plant was designed and built by ABB Lummus Global as a part of the larger power station complex using coal-fired boilers. This plant started up in 1990 and has been operating satisfactorily with lower than designed MEA losses. The key process parameters from the present design for Case 5/Concept A are compared with those from the AES plant (Barchas and Davis, 1992) in Table 3-43.

**Table 3-43: Key Process Parameters Comparison for Case 5/Concept A**

| PROCESS PARAMETER | AEP DESIGN (Case 5/Concept A) | AES DESIGN |
|---|---|---|
| Plant Capacity (TPD) | 9,888 | 200 |
| $CO_2$ in Feed, (% mol) | 13.9 | 14.7 |
| $O_2$ in Feed, (% mol) | 3.2 | 3.4 |
| $SO_2$ in Feed, (ppmv) | 10 (Max) | 10 (Max) |
| Solvent | MEA | MEA |
| Solvent Conc. (wt%) | 20 | 15 (Actual 17-18 wt%) |
| Lean Loading (mol $CO_2$ / mol MEA) | 0.21 | 0.10 |
| Rich Loading (mol $CO_2$ / mol MEA) | 0.44 | 0.41 |
| Stripper Feed Temperature, °F | 210 | 194 |
| Stripper Bottom Temperature, °F | 250 | 245 |
| Feed Temperature to Absorber, °F | 105 | 108 |
| $CO_2$ Recovery, % | 96 | 90 (Actual 96%-97%) |
| Absorber Pressure Drop, psi | 1 | 1.4 |
| Stripper Pressure Drop, psi | 0.6 | 4.35 |
| R/L Exchanger Approach, °F | 10 | 50 |
| $CO_2$ Compressor I/STG Temperature, °F | 105 | 115 |
| Liquid $CO_2$ Temperature, °F | 82 | -13 |
| Steam Consumption, lbm steam/ lbm $CO_2$ | 2.6 | 3.45 |
| Liquid $CO_2$ Pressure (psia) | 2,015 | 247 |

### 3.1.5.7 Case 5/Concept A OSBL Systems - $CO_2$ Removal, Compression, and Liquefaction System

**Reclaimer Bottoms (Case 5/Concept A):**

The reclaimer bottoms are generated during the process of recovering MEA from heat stable salts (HSS), which are produced from the reaction of MEA with $SO_2$ and $NO_2$. The HSS accumulate in the reclaimer during the lean amine feed portion of the reclaiming cycle. The volume of reclaimer bottoms generated will depend on the quantity of $SO_2$ and $NO_2$ that is not removed in the Flue Gas Scrubber. A typical composition of the waste is presented in Table 3-44.

**Table 3-44: Reclaimer Bottoms Composition for Case 5/Concept A**

| | |
|---|---|
| MEA | 9.5 wt% |
| $NH_3$ | 0.02 wt% |
| NaCl | 0.6 wt% |
| $Na_2SO_4$ | 6.6 wt% |
| $Na_2CO_3$ | 1.7 wt% |
| Insolubles | 1.3 wt% |
| Total Nitrogen | 5.6 wt% |
| Total Organic Carbon | 15.6 wt% |
| $H_2O$ | 59.08 wt% |
| pH | 10.7 |
| Specific Gravity | 1.14 |

### Filter Residues:

A pressure leaf filter filters a slipstream of lean amine. Diatomaceous earth is used as a filter-aid for pre-coating the leaves and as a body feed. Filter cycles depend on the rate of flow through the filter, the amount of filter aid applied, and the quantity of contaminants in the solvent. A typical composition of the filter residue is provided in Table 3-45. These will be disposed of by a contracted service which hawls away the drums of spent cake.

**Table 3-45: Filter Residue Composition for Case 5/Concept A**

| | |
|---|---|
| MEA | 2.5 wt% |
| Total Organic Carbon | 1.5 wt% |
| $SiO_2$ | 43 wt% |
| Iron Oxides | 32 wt% |
| Aluminum Oxides | 15 wt% |
| $H_2O$ | 6 wt% |
| pH | 10.0 |
| Specific Gravity | 1.0 |

### Excess Solvent Stripper Reflux Water:

The $CO_2$ Recovery Facility has been designed to operate in a manner to avoid accumulation of water in the Absorber/Stripper system. Conversely, no continuous make-up stream of water is required, either. By controlling the temperature of the scrubbed flue gas to the absorber, the MEA system can be kept in water balance. Excess water can accumulate in the Stripper Reflux Drum and can be reused once the system is corrected to operate in a balanced manner. Should water need to be discarded, contaminants will include $CO_2$ and MEA.

### Cooling Tower Blowdown:

The composition limits on cooling tower blowdown are shown in Table 3-46.

**Table 3-46: Cooling Tower Blowdown Composition Limitations – Case 5/Concept A**

| Component | Specification |
|---|---|
| Suspended Solids | 30 ppm average monthly, 100 ppm maximum daily |
| pH | 6.9 to 9 |
| Oil and Grease | 15 ppm maximum monthly, 20 ppm maximum daily |
| Free Chlorine | 0.035 ppm |

There is a thermal limit specification for the entire river. However, the blowdown volume is too small to affect it significantly.

**Relief Requirements:**

The relief valve discharges from the $CO_2$ Recovery Unit to atmosphere. No tie-ins to any flare header are necessary.

### 3.1.5.8 Case 5/Concept A Plant Layout - $CO_2$ Removal, Compression, and Liquefaction System

The new equipment required for Case 5/Concept A covers ~7.8 acres of plot area. Plant layout drawings prepared for the Case 5/Concept A $CO_2$ Recovery System are as follows:

These drawings are shown in Appendix I.

- Plot Plan – Overall Site before $CO_2$ Unit Addition
- U01-D-0208 Plot Plan – Case 5/Concept A: Flue Gas Cooling & $CO_2$ Absorption
- U01-D-0214 Plot Plan – Case 5/Concept A: Solvent Stripping
- U01-D-0204 Plot Plan – Case 5/Concept A: $CO_2$ Compression & Liquefaction
- U01-D-0211 Plot Plan – Case 5/Concept A: Overall Layout Conceptual Plan
- U01-D-0200R Plot Plan – Case 5/Concept A: Modified Overall Site Plan

Plant layout has been designed in accordance with a spacing chart called “Oil and Chemical Plant Layout and Spacing” Section IM.2.5.2 issued by Industrial Risk Insurers (IRI).

When reviewing the layout, the first thing to observe is that no highly flammable materials are handled within the $CO_2$ Recovery Unit. The open cup flash point of MEA is 93°C (200°F) and, therefore, will not easily ignite. In addition to MEA, the corrosion inhibitor is the only other hydrocarbon liquid within the battery limits. The flash point of this material is higher than that of MEA and is handled in small quantities.

As the chemicals used in the process present no fire hazard, there is an opportunity to reduce the minimum spacing between equipment from that normally considered acceptable in hydrocarbon handling plants. Regardless, for the drawings that follow, standard spacing requirements - as imposed by IRI - have been followed.

The plot areas in the immediate vicinity of Unit #5 available for the installation of the desired equipment are small. Some equipment items are placed on structures to allow other pieces of equipment to be placed underneath them. This way pumps and other equipment associated with the Absorber can be located under the structure. Locating the pumps under the structure has been considered acceptable because the fluids being pumped are not flammable.

Noise is an issue with the flue gas fan as much as it is with compressors. Discussions with vendors suggest that it will be possible to provide insulation on the fan casing to limit noise to acceptable levels. Therefore, it has been assumed that no building needs to be provided for noise reasons.

Having economized on the required plot space as noted above, it was judged not to be practical to divide up the absorbers and strippers that are required into the relatively small plot areas initially offered for this purpose. Eventually, it was agreed that the units would be placed in an area about 460 m (1,500 ft) northeast of the Unit #5/6 common stack. By locating the units in a single location, the MEA piping between the absorber and stripper could be minimized, however, the flue gas duct length and steam piping with this location are quite long.

The corrosion inhibitor must be protected against freezing during winter. The caustic solution will not freeze but will become very viscous when it gets cold. Therefore, a heated shed has been provided for housing the Corrosion Inhibitor and the Caustic injection packages.

The plot plan shows a substation in the Stripper area, but none for the Absorber area. The assumption is that because the electrical consumption of the Absorber equipment is small (0.23 MW) compared to the Stripper equipment, the equipment can be run directly from the auxiliary power 480-volt power system.

For the Rich/Lean Solvent Exchanger, which is a plate and frame type exchanger, area estimates received from vendors based on similar conditions suggest that five units/train would be sufficient for the specified service.

### 3.1.6 Steam Cycle Modifications, Performance, and Integration with Amine Process (Cases 1-5)

This section presents the performance and modification requirements for the steam/water cycles for all five cases of this study.

#### 3.1.6.1 Amine Process Integration

Figure 3-21 shows a simplified steam cycle schematic that highlights the basic modifications required to integrate the $CO_2$ capture process into the existing water-steam cycle. These modifications include:

- Addition of a new let down steam turbine generator (LSTG),
- Modification of the existing crossover piping (from existing IP turbine outlet to existing LP turbine inlet). Extracted steam will feed the new let down steam turbine generator and reclaim system of the amine $CO_2$ recovery system. The exhaust of the let down steam turbine generator (LSTG) ultimately provides the feed steam for the reboilers. This includes a new pressure control valve to maintain a required pressure level even at high extraction flow rates.

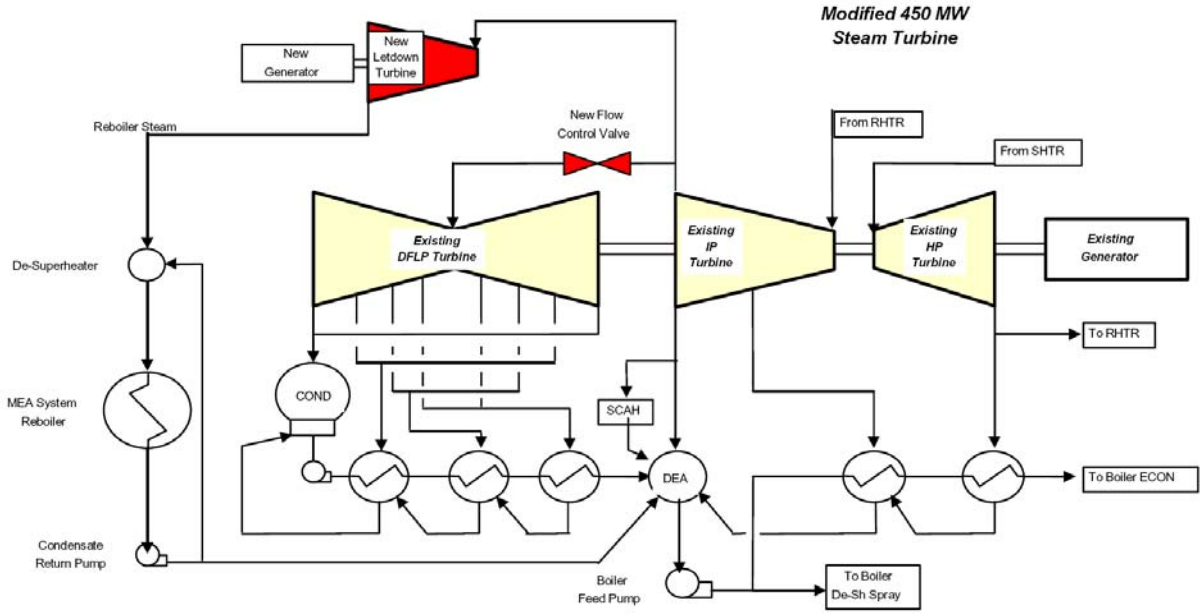


**Figure 3-21: Modified Steam/Water Schematic (simplified)**

Further modifications to the feedwater system, although not shown in Figure 3-21, are recommended in order to ensure optimum integration of the heat rejected within the $CO_2$ capture and compression system with the existing steam/water cycle.

For the efficient integration of the amine process into the existing water-steam cycle the locations where the steam needs to be extracted to feed the reboiler and the reclaimer need to be carefully matched. A thorough analysis of the overall process revealed that the amine system reboiler operation would be most economical at a steam pressure of 3.2 bara (47 psia) at the let down turbine exit (See Section 3.1.6.7). This pressure level also ensures that the amine will be protected from being destroyed by high temperatures. The amine system reclaimer needs steam at 6.2 bara (90 psia). When defining the locations of the extraction piping, it needs to be taken into account that these pressure levels need to be maintained also at loads differing from the MCR design load.

Another important assumption was made and is of crucial importance in determination of the potential modifications and, hence, performance of the unit with the MEA plant being in operation. It was assumed that the existing steam turbine/generator is required to continue operation at maximum load in case of a trip of the MEA plant. Additionally, all pressures should still be within a level that no steam will be blown off. This is of specific relevance for any turbine modifications, since changes in steam swallowing capacity of any turbine cylinder requires taking into account this requirement.

Four different scenarios were considered in the current study to assess the impact of various levels of $CO_2$ removal on the cost/benefit ratio. In the following paragraphs a description of the impact of the $CO_2$ removal system on water-steam cycle performance will be given. Five cases are discussed as defined below:

- Case 1 - 90% $CO_2$ removal with advanced amine system
- Case 2 - 70% $CO_2$ removal with advanced amine system
- Case 3 - 50% $CO_2$ removal with advanced amine system

- Case 4 - 30% $CO_2$ removal with advanced amine system
- Case 5 - 96% $CO_2$ removal with Kerr/McGee ABB Lummus amine system

For ease of performance comparison, the backpressure for each of the four cases was kept constant at 6.35 cm Hga (2.5 in. Hga).

The following subsections discuss the performance and modification requirements for the steam/water cycles for all five cases of this study.

#### 3.1.6.2 Case 1: Steam Cycle for 90% $CO_2$ Recovery

In order to remove 90% of the $CO_2$ contained in the flue gas, the amine plant requires approximately 152.5 kg/s of steam (1.21 x $10^6$ lbm/hr). This is approximately 50% of the steam that would enter the LP turbine cylinder in the absence of the amine plant. Out of this steam flow, roughly 4.5% supplies the reclaimer at a pressure of 6.2 bara (90 psia); whereas, the remaining larger portion is required for operation of the reboiler. Before entering the reboilers, steam is expanded through a new turbine, the so-called Let Down Turbine (LDT), to make the best use of the steam's energy. Refer to Appendix IV for technical details regarding the Let Down Turbine.

Without any additional measures, the decrease in steam flow entering the existing LP turbine would result in a corresponding lower pressure at the LP turbine inlet (about 50% of the pressure level without extraction). Consequently, the pressure at the exhaust of the existing IP turbine would also be reduced to about this same value. Keeping the live steam conditions constant would then result in increased mechanical loading of the IP blades in excess of the permissible stress levels. For this reason, a pressure control valve needs to be added in the IP-LP crossover pipe to protect the IP turbine blading.

Due to the high amount of flow extracted from the IP-LP crossover and, consequently, the remaining low flow passing through the LP turbine, there is a potential risk for the LP blades being damaged. By comparing the load for the 90% $CO_2$ removal case with data given in the Conesville #5 instruction manual for "lower load limit," it can be shown that the operation as shown in Figure 3-22 is well within the operational range of the existing LP turbine.

Care was taken to integrate the heat rejected within the amine process into the existing water-steam cycle in an efficient manner. The main sources of integrated heat are provided from three sources as listed below:

- $CO_2$ compressor intercoolers
- Stripper overhead cooler
- Refrigeration compressor cooler (de-superheating section)

Additionally, warm condensate is returned from the amine reboiler/reclaimer system to the existing deaerator. For the 90% $CO_2$ removal case, the most beneficial arrangement for heat integration is also shown in the lower part of Figure 3-22. It should be noted that with this arrangement the deaerator flow increases by approximately 26%. This may impact deaerator performance or require either modification of the deaerator or a change in the heat integration arrangement in order to reduce the duty of the deaerator. Although the cost for modification of the deaerator was not included in this study, given the relatively large costs required for the other plant modifications (new amine plant and $CO_2$ compression equipment), this omission should not impact the results of the study significantly.

In summary, the power output of the Conesville #5 Unit after modification to remove 90% of the $CO_2$ contained in the flue gas will decrease by approximately 16.3% (from 463.5 MWe to 388.0 MWe) when compared to the Base Case as shown in Section 2.2.4.

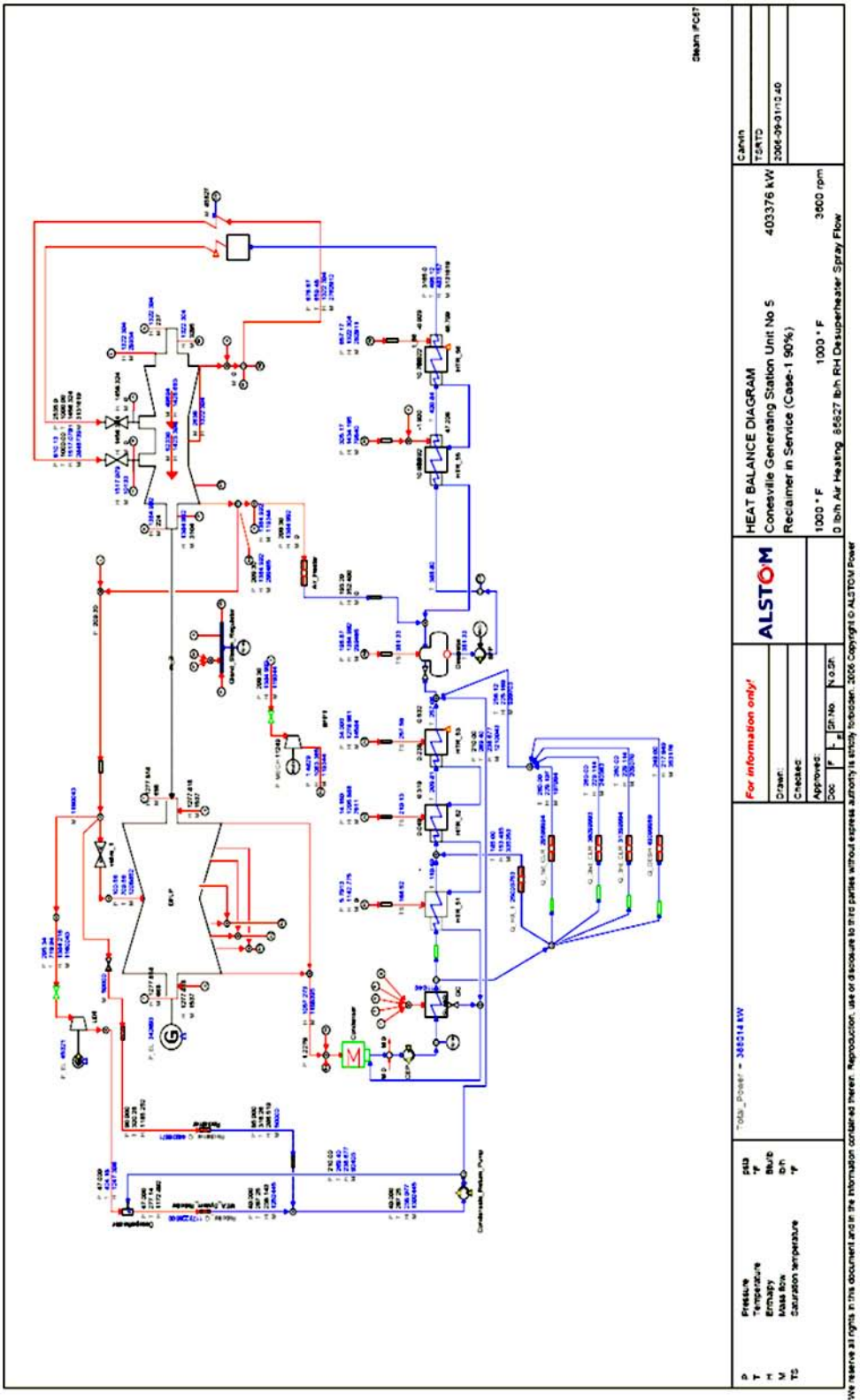


**Figure 3-22: Case 1 – Modified Water-Steam Cycle for 90% $CO_2$ Removal**

#### 3.1.6.3 Case 2: Steam Cycle for 70% $CO_2$ Recovery

In the case of removal of 70% of the $CO_2$ contained in the flue gas, the steam required to operate the boiler/reclaimer of the amine process is approximately 118.5 kg/s (940.8 x $10^3$ lbm/hr), equivalent to approximately 39% of the steam that would enter the LP turbine cylinder in the absence of the amine plant.

Similar to the 90% removal case, the lower steam flow entering the LP turbine would result in a correspondingly lower pressure at the LP turbine inlet (about 59% of the pressure without extraction). Consequently, the pressure at the exhaust of the IP turbine would also come down; therefore, a pressure control valve is required to protect the IP blading.

For this scenario of 70% $CO_2$ removal, a low load limitation within the LP is not expected to be an issue because even more steam remains within the LP turbine cylinder compared to the 90% removal case.

Heat integration is done in the same manner as for the 90% removal case and is shown in the lower part of Figure 3-23. The deaerator flow is somewhat less than in the 90% removal case, but still significantly higher than the flow as indicated for the reference case (approximately 24.5% larger). Again, this may impact performance of the deaerator or require either modification of the deaerator or a change in the heat integration arrangement in order to reduce the duty of the deaerator.

In summary, as illustrated in Figure 3-23, the power output of the Conesville #5 Unit after modification to remove 70% of the $CO_2$ contained in the flue gas will decrease by approximately 12.4% (from 463.5 MW to 405.9 MW) when compared to the Base Case (please refer Section 2.2.4).

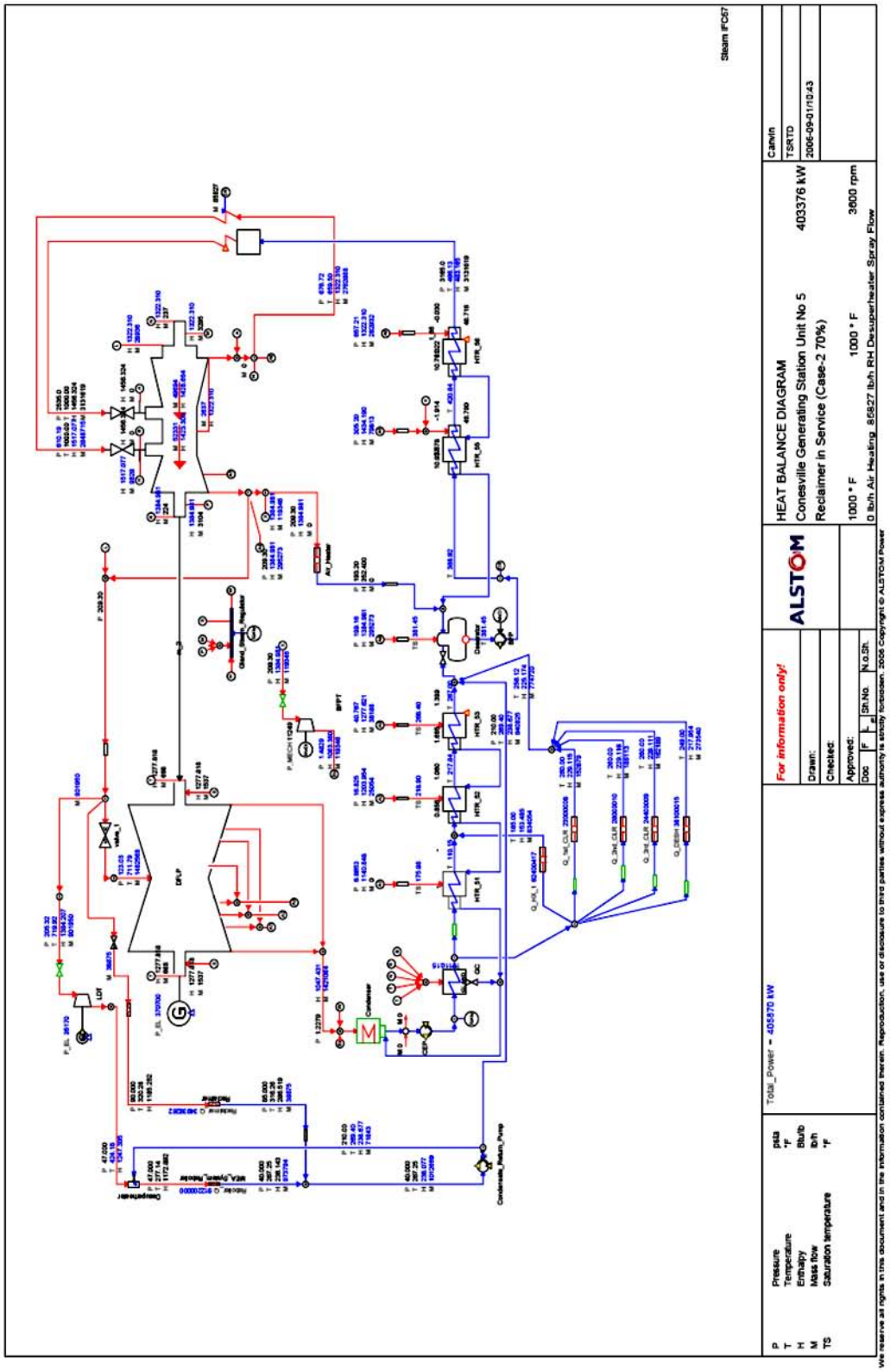


**Figure 3-23: Case 2 – Modified Water-Steam Cycle for 70% $CO_2$ Removal**

#### 3.1.6.4 Case 3: Steam Cycle for 50% $CO_2$ Recovery

In the case of removal of 50% of the $CO_2$ contained in the flue gas, the steam required to operate the boiler/reclaimer of the amine process is approximately 84.7 kg/s (671.9 x $10^3$ lbm/hr), equivalent to approximately 27.6% of the steam that would enter the LP turbine cylinder in the absence of the amine plant.

Again, the lower steam flow entering the LP turbine would result in a corresponding lower pressure at the LP turbine inlet (about 70% of the pressure without extraction) and, consequently, a lower pressure at IP exhaust. Therefore, a pressure control valve is required to protect the IP blading.

Operation close to low load limitation within the LP is not expected to be an issue.

Heat integration is done in the same manner as for the 90% removal case and is shown in Figure 3-24. The deaerator flow is somewhat less than in the 90% removal case, but still significantly higher than the flow as indicated for the reference case (approximately 20% higher). Again, this may impact performance of the deaerator or require either modification of the deaerator or a change in the heat integration arrangement in order to reduce the duty of the deaerator. Moving the location where the condensate from the amine plant is fed back into the turbine cycle up one feedwater heater, i.e., upstream of HTR #53 instead of downstream reduces the duty on the deaerator, but the power generated will be less by approximately 200 kW.

The modified water-steam cycle is shown in Figure 3-24. In summary, the power output of the Conesville #5 Unit after modification to remove 50% of the $CO_2$ will decrease by approximately 8.6% (from 463.5 MW to 423.5 MW) when compared to the Base Case (please refer to Section 2.2.4).

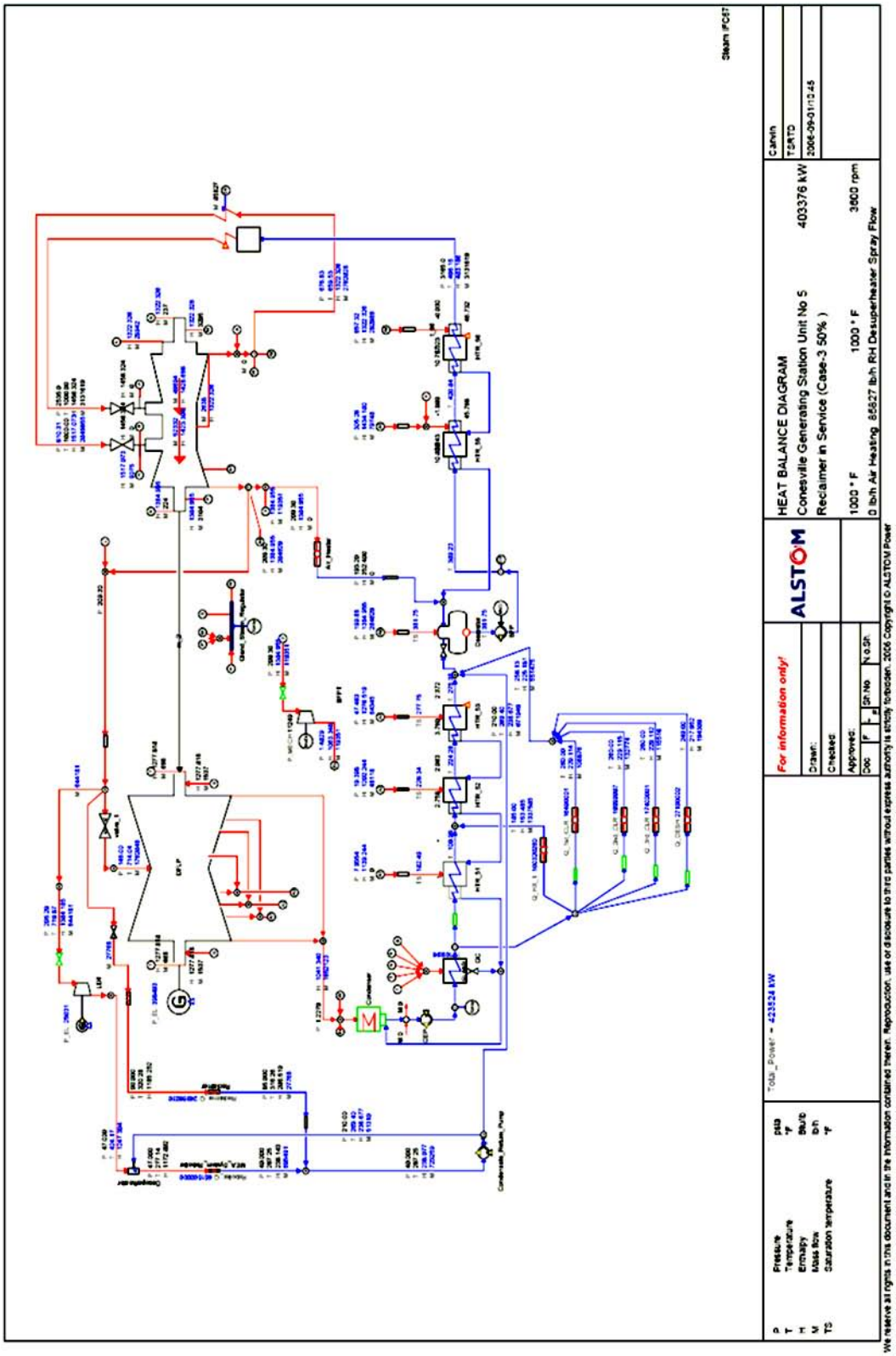


**Figure 3-24: Case 3 - Modified Water-Steam Cycle for 50% $CO_2$ Removal**

#### 3.1.6.5 Case 4: Steam Cycle for 30% $CO_2$ Recovery

In the case of removal of 30% of the $CO_2$ contained in the flue gas, the steam required to operate the boiler/reclaimer of the amine process is approximately 50.8 kg/s (403.2 x $10^3$ lbm/hr), equivalent to approximately 16.4% of the steam that would enter the LP turbine cylinder in the absence of the amine plant.

The lower steam flow entering the LP turbine results in a corresponding lower pressure at the LP turbine inlet (about 80.9% of the pressure without extraction). Consequently, the pressure at the exhaust of the IP turbine would also come down; therefore, a pressure control valve is required to protect the IP blading.

With the heat integration arrangement being the same as with the other cases, the deaerator flow still is approximately 13.4% greater than for the reference case. Again, this may impact performance of the deaerator, or require either modification of the deaerator, or a change in the heat integration arrangement in order to reduce the duty of the deaerator.

The modified water-steam cycle is shown in Figure 3-25. In summary, the power output of the Conesville #5 Unit after modification to remove 30% of the $CO_2$ will decrease by approximately 5% (from 463.5 MW to 440.7 MW) when compared to the reference case (please refer to Section 2.2.4).

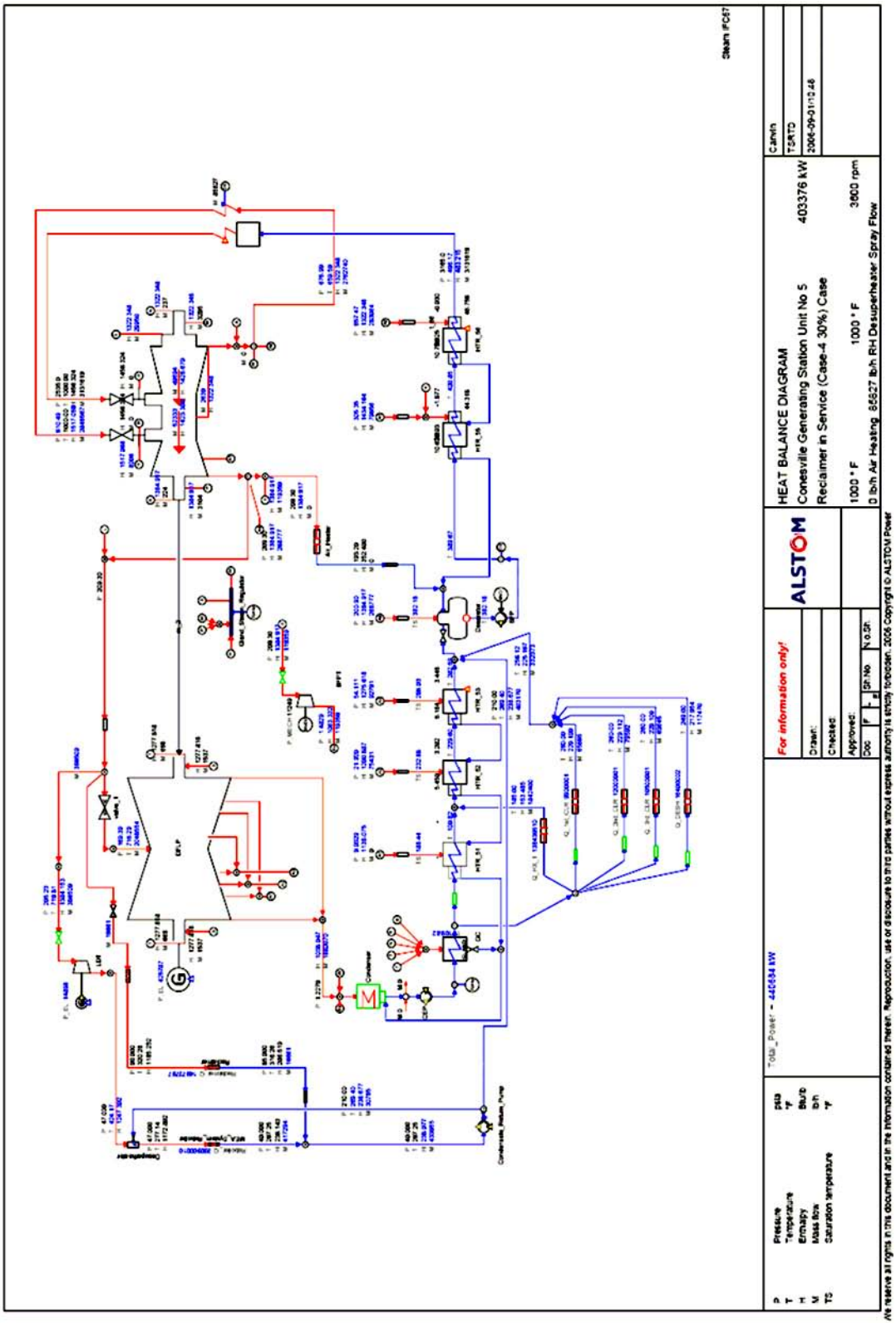


**Figure 3-25: Case 4 – Modified Water-Steam Cycle for 30% $CO_2$ Removal**

### 3.1.6.6 Case 5/Concept A: Steam Cycle for 96% $CO_2$ Recovery (from previous study)

The steam cycle system for Case 5/Concept A is modified as shown in Figure 3-26, while Figure 3-27 shows the associated Mollier diagram. It should be pointed out that the performance shown for the steam turbine in this case was developed in 2000 using a less detailed analysis than was used for Cases 1-4. About 79% of the IP turbine exhaust is extracted from the IP/LP crossover pipe. This steam is expanded to about 4.5 bara (65 psia) through a new let down steam turbine generating 62,081 kWe. The exhaust from the new turbine, at about 248°C (478°F), is de-superheated and then provides the energy requirement for the solvent regeneration done in the reboilers/stripper system of the MEA $CO_2$ removal process. The condensate from the reboilers is pumped to the existing deaerator. The remaining 21% of the IP turbine exhaust is expanded in the existing LP turbine. The current study confirmed that the existing LP turbine would be able to operate at this low flow condition. The modified existing steam cycle system produces 269,341 kWe. The total output from both generators is 331,422 kWe. This represents a gross output reduction of 132,056 kWe (about 28.5%) as compared to the Base Case.

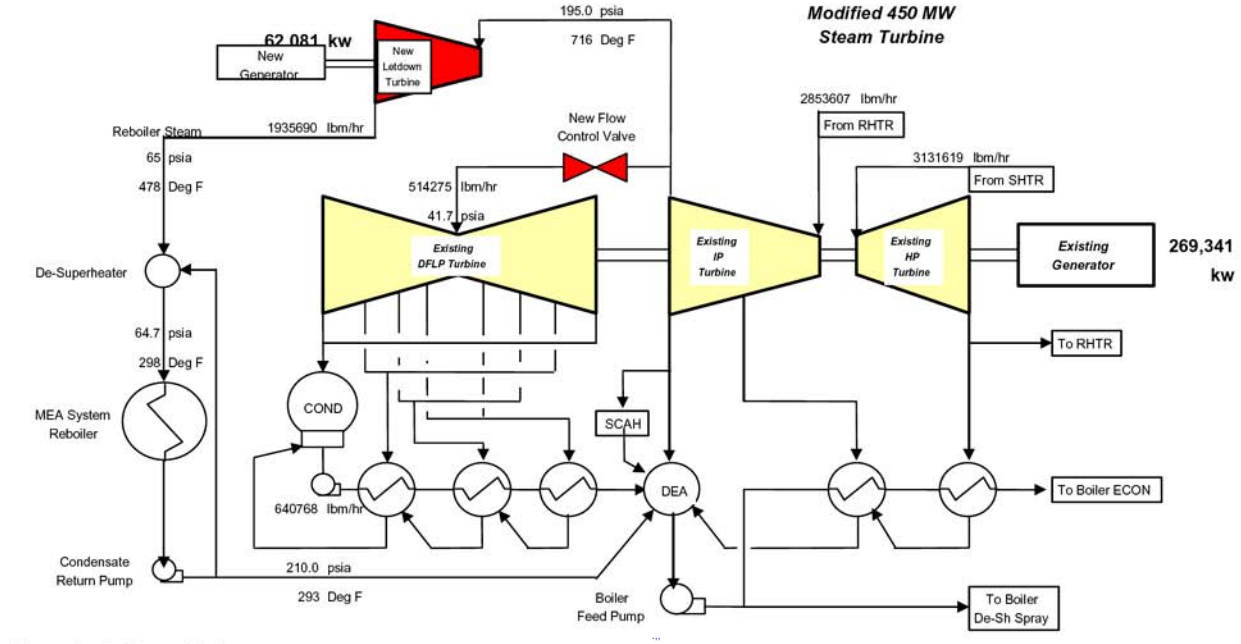


*Steam Cycle Energy Balance*

| Energy Outputs | ($10^6$ Btu/hr) | Energy Inputs | ($10^6$ Btu/hr) |
|---|---|---|---|
| Power Output ( Existing and New Turbines ) | 1151 | Boiler Heat Input | 3707 |
| Steam Coil Air Heater Output | 0 | Condensate Pump | 0 |
| MEA System Reboiler Duty Output | 1953 | Total Energy Input | 3708 |
| Condenser Loss | 603 | | |
| Total Energy Output | 3708 | In - Out | 0 |

**Figure 3-26: Case 5/Concept A – Modified Water-Steam Cycle for 96% $CO_2$ Removal**

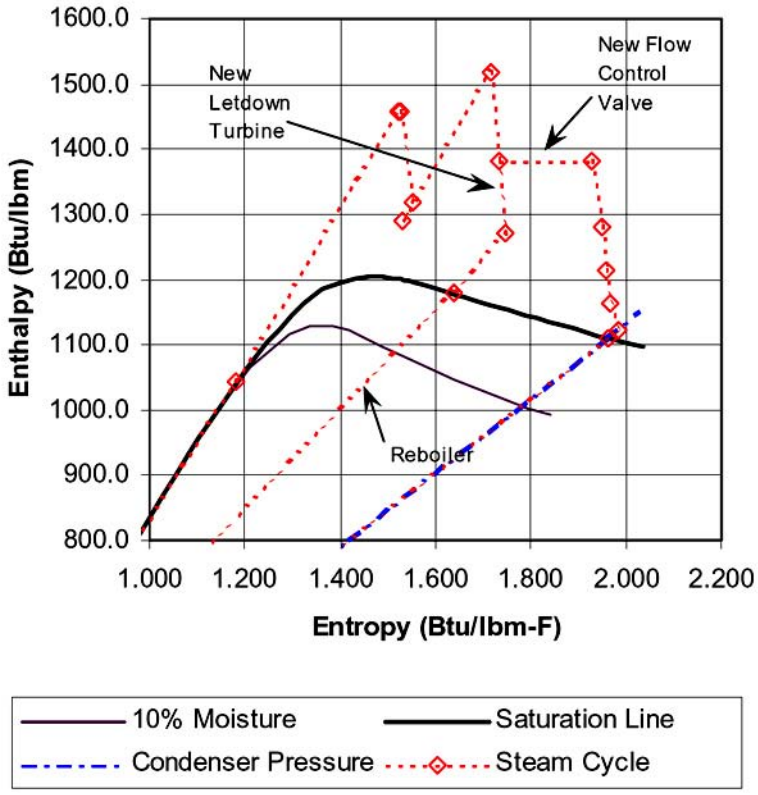


**Figure 3-27: Case 5/Concept A - Modified Water-Steam Cycle Mollier Diagram for 96% $CO_2$ Removal**

### 3.1.6.7 Discussion of Alternate Solutions for Steam Extraction

While this study focuses on the addition of a new LDT to the existing water-steam cycle to effectively use the energy contained in the steam while matching the requirements of the amine plant, the following paragraphs will give a brief overview of other available retrofit solutions as potential alternatives to the let down turbine approach. The common advantage of all the alternate retrofit scenarios under consideration is that there is no need for an additional turbine-generator with all the equipment and modifications that are linked to this (e.g., new foundations/foundation enforcements, additional transformer, piping, grid connection, etc).

As with all arrangements under consideration, retrofit scenarios have to take into account that the unit has to be able to run at maximum load both with and without the amine plant being in operation. It is this requirement that tremendously increases the mechanical design load acting on the turbine blades, since the pressure upstream of the location where the steam will be extracted drops approximately proportional to the relative amount of steam that will be extracted. This of course means that a scenario for 90% removal of $CO_2$, where approximately 50% of the steam entering the existing LP turbine cylinder (See Figure 3-28) will be extracted, puts the greatest load on the blading.

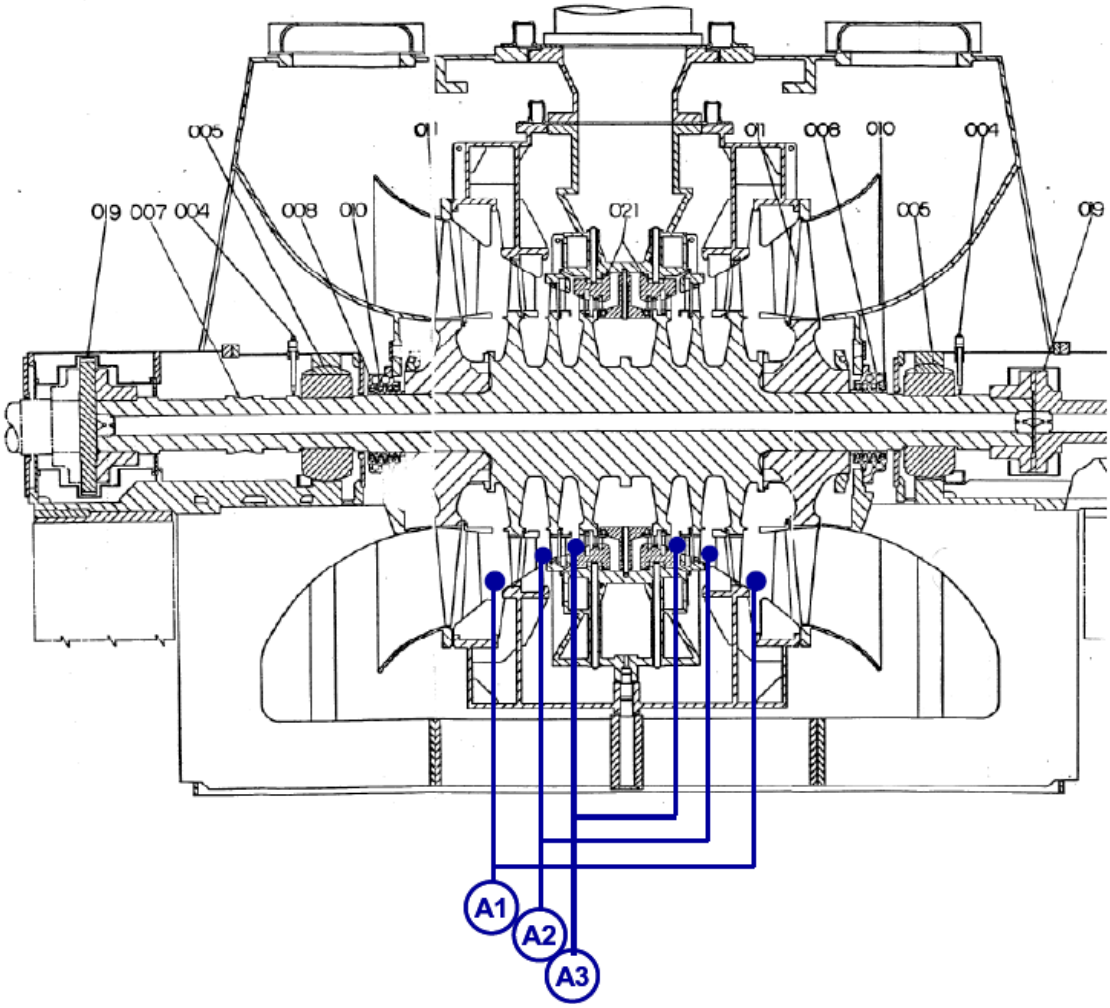


**Figure 3-28: Existing LP Turbine at Conesville Unit #5**

In Table 3-47 pressure data are given for a scenario with 30% $CO_2$ removal. The data in Row 2 of the table ("Reference Conditions") are for the 5% overpressure load condition without any modification. In Row 3 ("30% $CO_2$ removal"), the impact of steam extraction on the pressure distribution within the remaining LP turbine can be seen. Due to the given swallowing capacity of the existing LP turbine the pressure at the LP turbine, inlet drops down from ~14.1 bara (205 psia) with no steam extraction to ~11.7 bara (169 psia) with the amine plant being in operation [requiring ~51 kg/s (403,000 lbm/hr) of steam to remove 30% of the $CO_2$]. Without taking additional measures, about the same pressure would also act on the exhaust section of the IP turbine and the existing blading would not be able to withstand this increased mechanical loading.

**Table 3-47: Expected Steam Conditions at Extraction Points for 30% $CO_2$ Removal**

| | | A1 | A2 | A3 | LP inlet | |
|---|---|---|---|---|---|---|
| **Reference Conditions** | | 9.5 psia 169.8 klb/hr | 25.2 psia 119.5 klb/hr | 63.7 psia 140.9 klb/hr | 205.1 psia 2,486.4 klb/hr | No steam extraction |
| **30% $CO_2$ removal** | Existing turbine, pls. refer to Section "30% removal" above | 9.0 psia 0 klb/hr | 21.9 psia 75.4 klb/hr | 54.1 psia 92.8 klb/hr | 169.4 psia 2,048.6 klb/hr | Steam extraction in operation |
| **Scenario "LP retrofit"** | 30% $CO_2$ removal, no LDT, retrofitted LP turbine | ~9.0 psia; determined by turbine swallowing capacity & backpressure | 47 psia to feed reboiler | 90 psia to feed reclaimer | 205.1 psia | Steam extraction in operation |
| **Scenario "LP & HP/IP retrofit"** | 30% $CO_2$ removal, requirements for LP turbine retrofit | ~9.0 psia; determined by turbine swallowing capacity & backpressure | ~22 psia | ~47 psia | ~105 psia | Steam extraction in operation |

A retrofit solution offers the potential to specifically address these issues. This can be done by designing the new blade path in such a way that the pressure levels required to feed the amine plant can be closely matched at the extraction points inside the LP turbine, thus minimizing the impact on the IP turbine. A preliminary engineering assessment revealed that a steam path could be designed to achieve a 6.2 bara (90 psia) pressure level at the first extraction point ("A3") to feed the reclaimer as well as a 3.2 bara (47 psia) pressure level at the second extraction point ("A2") to feed the reboilers. Since the steam flow to feed the reboiler with the 3.2 bara (47 psia) steam is significantly more than the flow that was originally extracted to feed the connected feedwater heater (48.7 kg/s vs. 15.1 kg/s or 386.5 $x10^3$ lbm/hr vs. 119.5 $x10^3$ lbm/hr) it is very likely that the piping requires modification, which in turn may mean that the LP turbine outer casing also needs to be modified in order to allow bigger pipe diameters to be connected. It also needs to be considered that the existing piping and the connected feedwater heater most likely will not be designed to allow operation at the higher pressure (3.2 bara vs. 1.7 bara or 47 psia vs. 25.2 psia). This could be overcome by either replacement of the existing piping and feedwater heater, or it needs to be checked whether the blade path and turbine casing could be modified to allow for an additional extraction point at approximately 1.7 bara (25 psia).

In principle, the comments above apply similarly to the 50%, 70%, and 90% $CO_2$ removal scenarios with the requirements for a proper steam path design getting more and more challenging as more steam is required for the amine plant, i.e., with increasing rate of $CO_2$ removal. At higher removal rates, in order to allow operation, both with and without the amine plant being in operation, it is likely that an HP/IP retrofit needs to be considered as well. This would allow not only reducing the mechanical load on the LP blading by reducing the pressure

level at LP inlet, but also better matching of the extraction pressures to the new requirements while optimizing cycle efficiency.

In summary, alternative technically proven retrofit solutions are available that may offer attractive solutions that does not necessitate the addition of a new Let Down Turbine. For a typical LP turbine retrofit solution, please refer to Figure 3-29. It should be noted that all of the retrofit options (HP, IP, LP), in addition to the advantages indicated above, offer the potential advantage of improved heat rate and power output due to the application of state of the art blading technology, and therefore can mitigate, to some extent, the performance deterioration due to the addition of the post-combustion carbon capture equipment. To have a sound basis for comparison and evaluation, a detailed engineering assessment is required, taking into account unit specifics that go well beyond the intent and scope of this study.

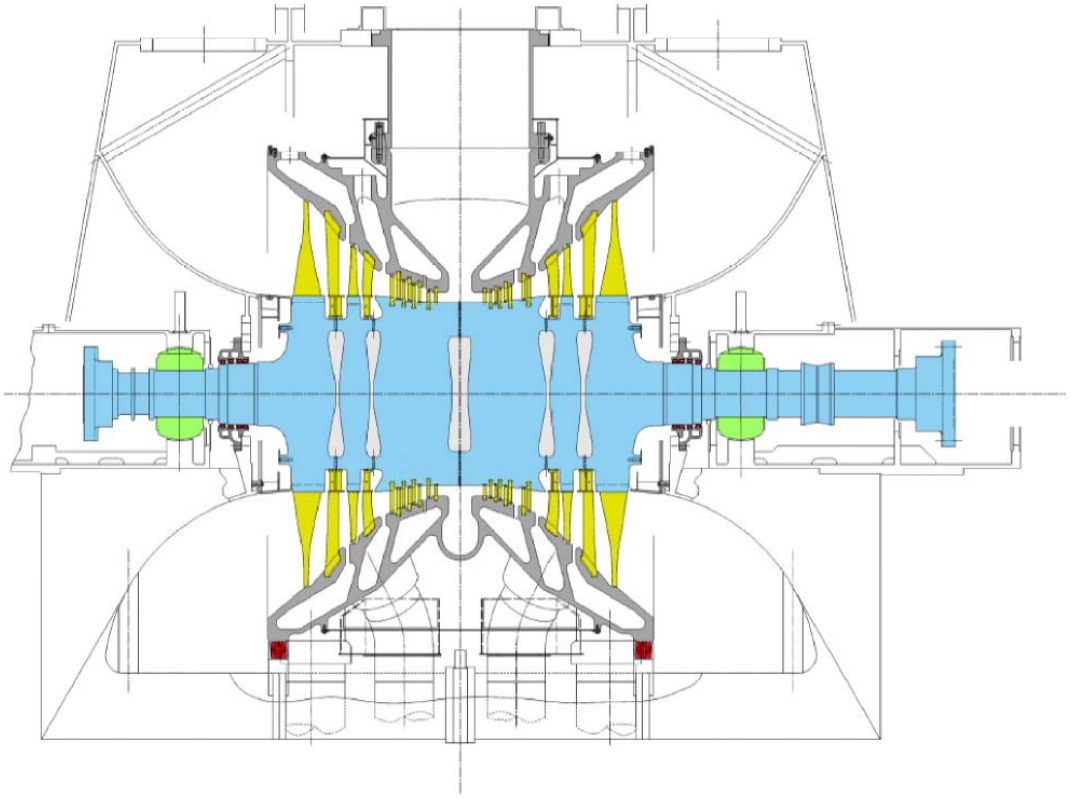

**Figure 3-29: Typical Retrofit Solution for the Conesville Unit #5 LP Turbine Type**

### 3.1.7 Project Construction Schedule (Cases 1-5)

Figure 3-30 shows the project construction schedule for the retrofit of Conesville Unit #5 to $CO_2$ capture, which is 36 months in duration. This schedule is assumed to apply to each of the five cases in this study (Cases 1-5). Engineering is completed in the first 15 months. Procurement occurs in months 9-23 and Construction takes place in months 14-34. Commissioning and startup are done in months 35 and 36.

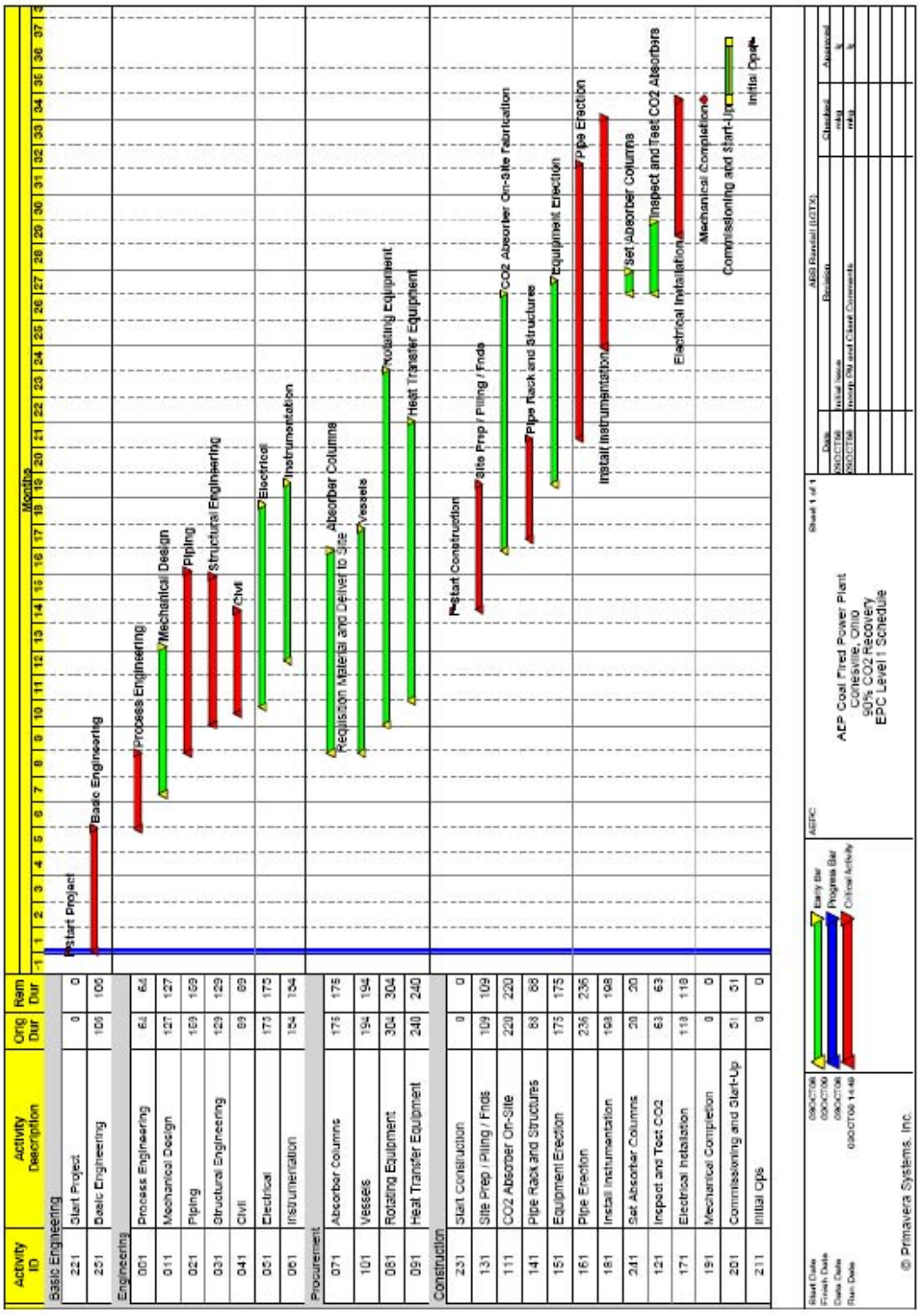


**Figure 3-30: Project Construction Schedule (Cases 1-5)**

## 3.2 Summary and Comparison of Overall Plant Performance and Carbon Dioxide Emissions (Cases 1-5)

This section summarizes overall performance and $CO_2$ emissions from the existing and modified power plants. Table 3-48 shows a comparison of the Conesville #5 plant performance and emissions for the $CO_2$ recovery cases and the Base Case that has no $CO_2$ recovery system. The first column shows the performance results for the Base Case. The performance shown for the Base Case is identical to what was reported in the previous study (Bozzuto et al., 2001) for this unit.

**Table 3-48: Plant Performance and $CO_2$ Emissions Comparison (Base Case and Cases 1-5)**

| | | (units) | Base-Case Original Plant | Case 5 Concept A MEA - 96% Capture | Case 1 Advanced MEA - 90% Capture | Case 2 Advanced MEA - 70% Capture | Case 3 Advanced MEA - 50% Capture | Case 4 Advanced MEA - 30% Capture |
|---|---|---|---|---|---|---|---|---|
| ***Boiler Parameters*** | | | | | | | | |
| Main Steam Flow | | (lbm/hr) | 3131619 | 3131651 | 3131651 | 3131651 | 3131651 | 3131651 |
| Reheat Steam Flow (to IP turbine) | | (lbm/hr) | 2853607 | 2853607 | 2848739 | 2848715 | 2848655 | 2848567 |
| Main Steam Pressure | | (psia) | 2535 | 2535 | 2535 | 2535 | 2535 | 2535 |
| Main Steam Temp | | (Deg F) | 1000 | 1000 | 1000 | 1000 | 1000 | 1000 |
| Reheat Steam Temp | | (Deg F) | 1000 | 1000 | 1000 | 1000 | 1000 | 1000 |
| Boiler Efficiency | | (percent) | 88.13 | 88.13 | 88.13 | 88.13 | 88.13 | 88.13 |
| Flue Gas Flow leaving Economizer | | (lbm/hr) | 4014743 | 4014743 | 4014743 | 4014743 | 4014743 | 4014743 |
| Flue Gas Temperature leaving Air Heater | | (Deg F) | 311 | 311 | 311 | 311 | 311 | 311 |
| Coal Heat Input (HHV) | (HHV) | ($10^6$ Btu/hr) | 4228.7 | 4228.7 | 4228.7 | 4228.7 | 4228.7 | 4228.7 |
| | (LHV) | ($10^6$ Btu/hr) | 4037.9 | 4037.9 | 4037.9 | 4037.9 | 4037.9 | 4037.9 |
| ***$CO_2$ Removal Steam System Parameters*** | | | | | | | | |
| $CO_2$ Removal System Steam Pressure | | (psia) | --- | 65 | 47 | 47 | 47 | 47 |
| $CO_2$ Removal System Steam Temp | | (Deg F) | --- | 478 | 424 | 424 | 424 | 424 |
| $CO_2$ Removal System Steam Extraction Flow | | (lbm/hr) | --- | 1935690 | 1210043 | 940825 | 671949 | 403170 |
| $CO_2$ Removal System Condensate Pressure (from reboilers) | | (psia) | --- | 64.7 | 40 | 40 | 40 | 40 |
| $CO_2$ Removal System Condensate Temperature | | (Deg F) | --- | 292.7 | 267.3 | 267.3 | 267.3 | 267.3 |
| $CO_2$ Removal System Heat to Cooling Tower | | ($10^6$ Btu/hr) | | 1441.1 | 890.2 | 692.5 | 494.2 | 293.1 |
| Natural Gas Heat Input | (HHV)[2] | ($10^6$ Btu/hr) | 0 | 17.7 | 13.0 | 9.7 | 6.7 | 4.2 |
| [2] (For Desicant Regeneration) | (LHV) | ($10^6$ Btu/hr) | --- | 16.0 | 11.7 | 8.7 | 6.0 | 3.8 |
| | | ($10^6$ SCF/Day) | | 0.417 | 0.312 | 0.232 | 0.161 | 0.101 |
| ***Steam Cycle Parameters*** | | | | | | | | |
| Total Heat Input to Steam Cycle | | ($10^6$ Btu/hr) | 3707.4 | 3707.4 | 3707.4 | 3707.4 | 3707.4 | 3707.4 |
| Heat Output to $CO_2$ Removal System Reboilers & Reclaimer | | ($10^6$ Btu/hr) | --- | 1953.0 | 1218.1 | 947.1 | 676.5 | 405.9 |
| Existing Condenser Pressure | | (psia) | 1.23 | 1.23 | 1.23 | 1.23 | 1.23 | 1.23 |
| Existing Condenser Heat Loss | | ($10^6$ Btu/hr) | 2102.8 | 603.3 | 1257.0 | 1514.7 | 1778.6 | 2047.6 |
| Existing Steam Turbine Generator Output | | (kW) | 463478 | 269,341 | 342693 | 370700 | 398493 | 425787 |
| $CO_2$ Removal System Turbine Generator Output | | (kW) | 0 | 62,081 | 45321 | 35170 | 25031 | 14898 |
| Total Turbine Generator Output | | (kW) | 463478 | 331422 | 388014 | 405870 | 423524 | 440685 |
| ***Auxiliary Power Requirements*** | | | | | | | | |
| Condensate Pump Power | | (kW) | 563 | 450 | 504 | 515 | 527 | 540 |
| Condenser Cooling Water Pump Power | | (kW) | 5562 | 5407 | 5679 | 5838 | 6011 | 6191 |
| Boiler Island Auxiliary Power (Fans & Pulverizers) | | (kW) | 7753 | 7753 | 7753 | 7753 | 7753 | 7753 |
| Coal & Ash Handling System | | (kW) | 1020 | 1020 | 1020 | 1020 | 1020 | 1020 |
| FGD & ESP System Auxiliary Power | | (kW) | 8157 | 8157 | 8157 | 8157 | 8157 | 8157 |
| Misc. Auxiliary Power (Lighting, HVAC, Trans, etc) | | (kW) | 6645 | 6645 | 6645 | 6645 | 6645 | 6645 |
| $CO_2$ Removal System Auxiliary Power | | (kW) | 0 | 50355 | 54939 | 42697 | 30466 | 18312 |
| Total Auxiliary Power | | (kW) | 29700 | 79788 | 84697 | 72625 | 60579 | 48618 |
| fraction of gross output | | (fraction) | 0.064 | 0.241 | 0.218 | 0.179 | 0.143 | 0.110 |
| ***Plant Performance Parameters*** | | | | | | | | |
| Net Plant Output | | (kW) | 433778 | 251634 | 303317 | 333245 | 362945 | 392067 |
| Normalized Net Plant Output (Relative to Base Case) | | (fraction) | 1.00 | 0.58 | 0.70 | 0.77 | 0.84 | 0.90 |
| Net Plant Efficiency (HHV) | | (fraction) | 0.3501 | 0.2022 | 0.2441 | 0.2683 | 0.2925 | 0.3161 |
| Net Plant Efficiency (LHV) | | (fraction) | 0.3666 | 0.2119 | 0.2556 | 0.2811 | 0.3063 | 0.3311 |
| Normalized Efficiency (HHV; Relative to Base Case) | | (fraction) | 1.00 | 0.58 | 0.70 | 0.77 | 0.84 | 0.90 |
| Net Plant Heat Rate (HHV) | | (Btu/kWh) | 9749 | 16875 | 13984 | 12719 | 11670 | 10796 |
| Net Plant Heat Rate (LHV) | | (Btu/kWh) | 9309 | 16110 | 13351 | 12143 | 11142 | 10309 |
| ***Plant $CO_2$ Emissions*** | | | | | | | | |
| Carbon Dioxide Produced | | (lbm/hr) | 866102 | 868137 | 867595 | 867212 | 866872 | 866585 |
| Carbon Dioxide Recovered | | (lbm/hr) | 0 | 835053 | 779775 | 607048 | 433606 | 260164 |
| Carbon Dioxide Emissions | | (lbm/hr) | 866102 | 33084 | 87820 | 260164 | 433266 | 606422 |
| Fraction of Carbon Dioxide Recovered | | (fraction) | 0 | 0.962 | 0.90 | 0.70 | 0.50 | 0.30 |
| Specific Carbon Dioxide Emissions | | (lbm/kWh) | 1.997 | 0.131 | 0.290 | 0.781 | 1.194 | 1.547 |
| Normalized Specific $CO_2$ Emissions (Relative to Base Case) | | (fraction) | 1.00 | 0.066 | 0.145 | 0.391 | 0.598 | 0.775 |
| Avoided Carbon Dioxide Emissions (as compared to Base) | | (lbm/kWh) | --- | 1.865 | 1.707 | 1.216 | 0.803 | 0.450 |

The second column shows results for Case 5/Concept A, also from the previous study (Bozzuto, et al., 2001), which captured ~96% of the $CO_2$ using the Kerr-McGee/ABB Lummus Global oxygen inhibited MEA technology. Columns 3, 4, 5, and 6 show results for Cases 1-4 of the current study, which capture 90%, 70%, 50%, and 30% of the $CO_2$, respectively, using an advanced MEA system.

Several comparisons have been made in these tables and throughout the report. Some of the more important comparisons are categorized and summarized in the following subsections.

### 3.2.1 Auxiliary Power and Net Plant Output

The auxiliary power required for the Base Case is 29,700 kW or about 6.4% of the gross electrical output. Net plant output is 433,778 kW. All the $CO_2$ capture options require large amounts of additional auxiliary power to the $CO_2$ compression systems and $CO_2$ capture systems, which deliver the $CO_2$ as a liquid at 138 barg (2,000 psig). These $CO_2$ capture and compression systems consume in the range of about 18-55 MWe. The total amount of auxiliary power for these plants represents a range of about 11-24% of the gross output, depending on $CO_2$ recovery level, as shown in Figure 3-31.

Additionally, extraction of steam from the existing steam turbine to provide energy necessary for solvent regeneration also significantly reduces steam turbine output (refer to Section 3.2.4) and, therefore, reduces net plant output. Net plant output is reduced to between 252-392 MWe for these cases or between about 58%-90% of the Base Case output as shown in Figure 3-31.

Comparison of net plant outputs for Case 5/Concept A from the original study (Bozzuto et al., 2001) and the advanced MEA 90% Capture case of the current study indicates the impact of the advanced MEA solvent. An improvement of about 51 MWe in net output (~20% greater output) is realized with the advanced MEA solvent. This represents an improvement of about 28% on output reduction. Correcting to a common $CO_2$ capture percentage of 96% would reduce this improvement to about 26%.

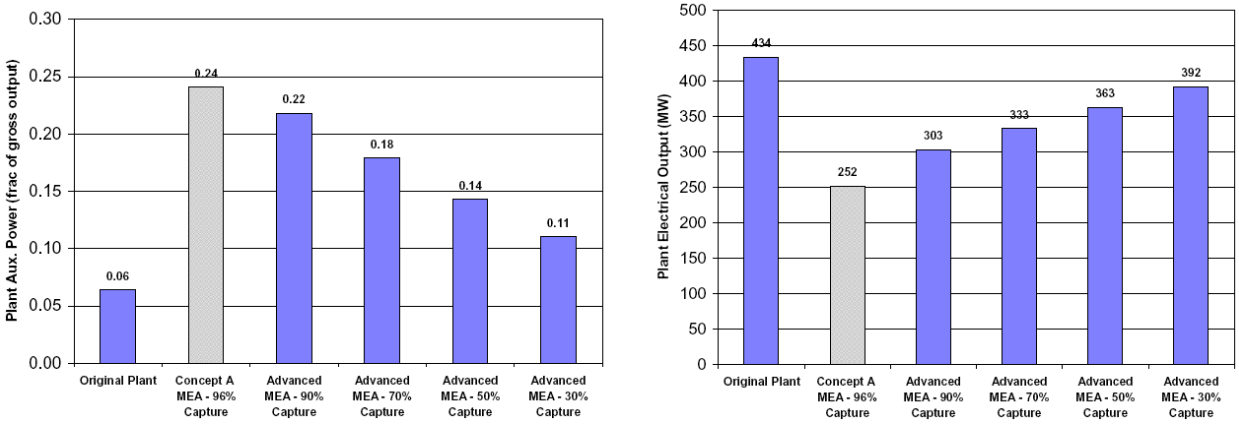


**Figure 3-31: Plant Auxiliary Power & Net Electrical Output (MWe)**

### 3.2.2 Net Plant Heat Rate and Thermal Efficiency

Because of the large energy requirements for solvent regeneration and large auxiliary power demands for the new equipment required for the $CO_2$ capture systems, net plant heat rate and thermal efficiency are degraded substantially relative to the Base Case as shown in Figure 3-32. Figure 3-33 shows the same results plotted as a function of the capture level. As shown in Figure 3-33, the thermal efficiency decreases linearly for the advanced amine cases as $CO_2$ capture level increases (Cases 1-4) and then drops sharply for Case 5 with the Kerr/McGee ABB Lummus amine.

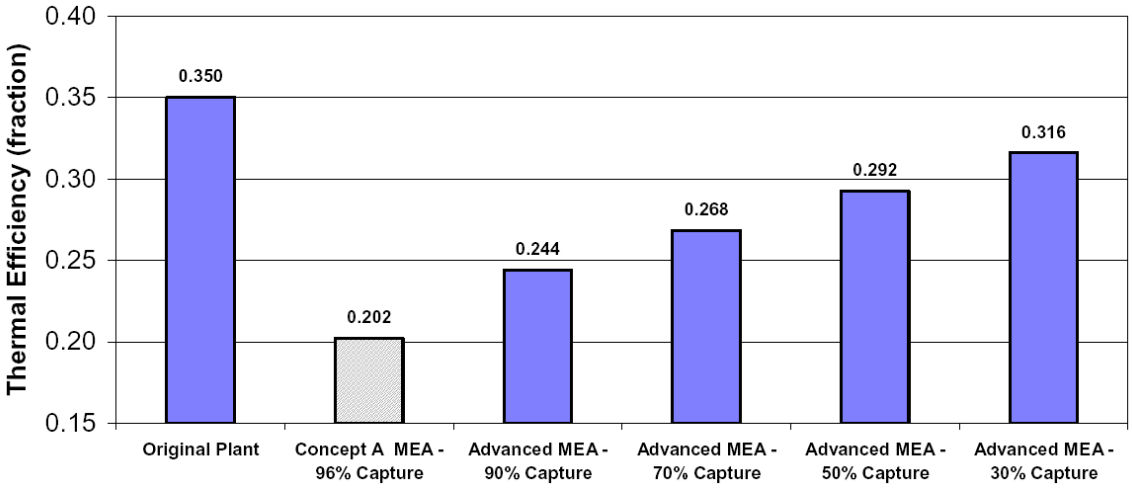


**Figure 3-32: Plant Thermal Efficiency (HHV Basis)**

The Base Case plant thermal efficiency (HHV Basis) is about 35%. For the $CO_2$ capture cases, with large amounts of steam extracted for solvent regeneration and increased auxiliary power for $CO_2$ compression and liquefaction systems, plant thermal efficiencies are reduced to between 31.6%-20.2% (HHV basis) depending on capture level.

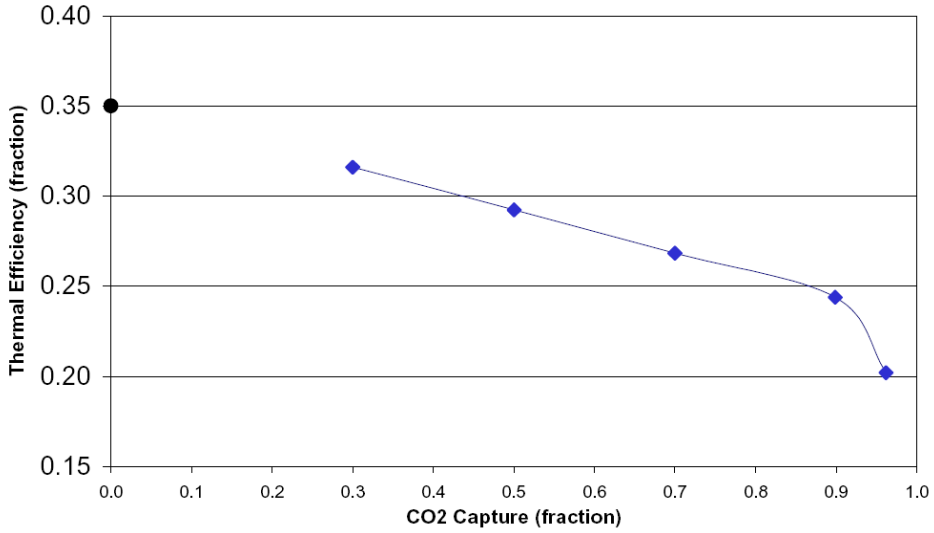


**Figure 3-33: Plant Thermal Efficiency vs. Capture Level**

Figure 3-34 shows the efficiency losses relative to the Base Case. Thermal efficiency losses range from about 3.4 to 14.8 percentage points.

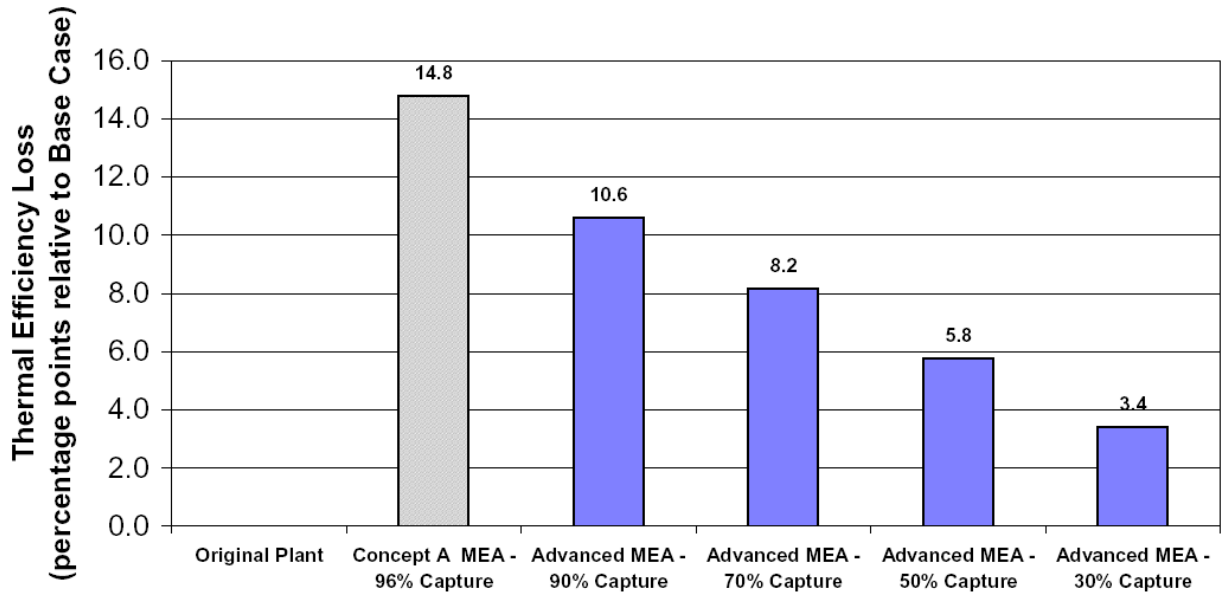


**Figure 3-34: Plant Thermal Efficiency Loss Relative to Base Case (HHV Basis)**

Comparison of thermal efficiency losses for Case 5/Concept A from the original study (Bozzuto et al., 2001), and the advanced MEA 90% capture case of the current study indicates the impact of using the advanced MEA solvent. A reduction of about 4.2 percentage points in thermal efficiency loss is realized with the advanced MEA solvent. This represents an improvement of about 28% with the advanced MEA solvent. Correcting to a common $CO_2$ capture percentage of ~96% would reduce this improvement to about 3.5 percentage points in thermal efficiency loss or about 24%.

### 3.2.3 $CO_2$ Emissions

$CO_2$ emissions are summarized in Table 3-48. Specific carbon dioxide emissions were reduced from 906 g/kWh (1.997 lbm/kWh) for the Base Case to between 59-702 g/kWh (0.131-1.547 lbm/kWh) depending on $CO_2$ capture level for these cases. This corresponds to between 6.6% and 77.5% of the Base Case carbon dioxide emissions. Figure 3-35 and Table 3-48 indicate the quantity of $CO_2$ captured and the avoided $CO_2$ emissions.

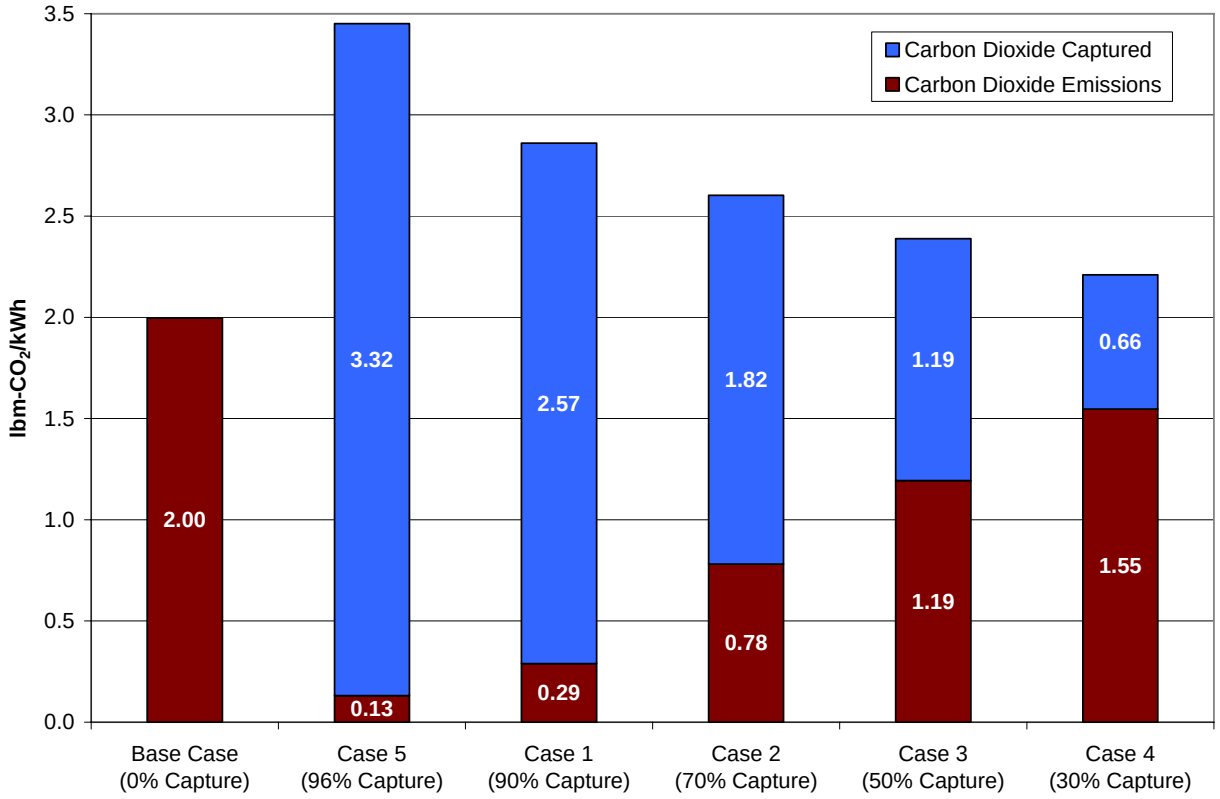


**Figure 3-35: Carbon Dioxide Distribution**

Figure 3-36 compares specific $CO_2$ emissions (lbm/kWh). Recovery of $CO_2$ ranged from 30% to 96% for the capture cases.

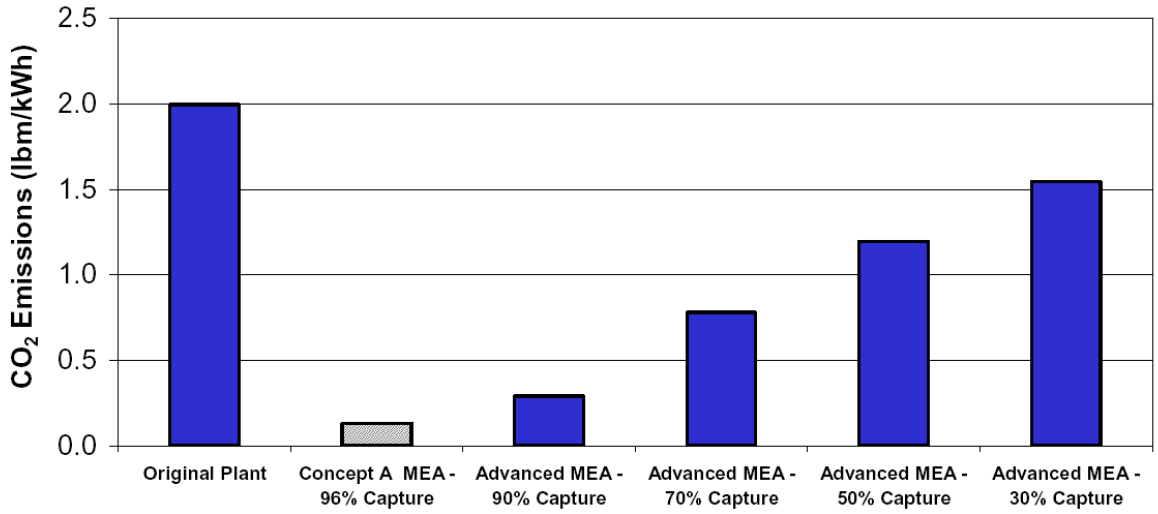


**Figure 3-36: Specific Carbon Dioxide Emissions**

Figure 3-37 shows these same $CO_2$ emission results plotted as a function of capture level.

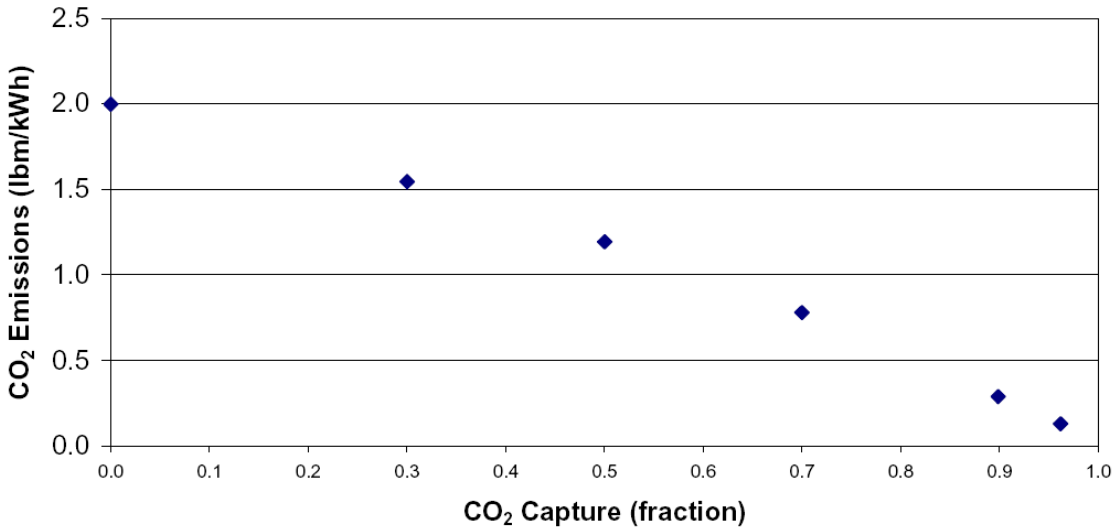


**Figure 3-37: Specific Carbon Dioxide Emissions vs. $CO_2$ Capture Level**

### 3.2.4 Steam Cycle Performance

The Base Case steam cycle is considered fairly typical of the U.S. fleet with subcritical steam conditions of 175 bara / 538°C / 538°C (2,535 psia / 1,000°F / 1,000°F). These represent the most common steam conditions for the existing fleet of U.S. electric utility power plant units in operation today. Six extraction feedwater heaters are used. The generator in this case produces 463,478 kWe.

The steam cycles for the five capture cases were all modified in a similar fashion. The steam cycles for the $CO_2$ capture cases differ from the Base Case steam cycle in that they each extract significant quantities of steam from the IP/LP crossover pipe. The extracted steam, at about 13.8 bara (200 psia) is expanded through a new "let down" steam turbine generating electric power before the steam is exhausted into the reboilers of the $CO_2$ recovery plant. The exhaust pressure of 4.5 bara (65 psia) was used for all the $CO_2$ capture cases (90%, 70%, 50%, and 30% capture) using the advanced amine of the current study (i.e., Cases 1-4).

Additionally, for Cases 1-4 of the current study, low-level heat was recovered from various areas of the $CO_2$ capture and compression system, and this heat was integrated with the steam cycle for overall plant efficiency improvement. This heat integration was possible in the current study because the $CO_2$ capture and compression equipment was able to be located relatively close to the existing unit. The absorbers were located near the existing Unit #5/6 common stack, and the strippers were located near the existing steam turbine. The $CO_2$ compressors were located as close as possible to the new strippers. In the previous study, all the $CO_2$ capture and compression equipment (absorbers, strippers, compressors, etc.) was located approximately 457 m (1,500 ft) northeast of the existing Conesville Unit #5/6 stack. Because of this relatively long distance, heat integration was determined to be impractical in the previous study.

The modified existing steam turbine generator of Case 5/Concept A, analyzed in the previous study, produces ~269 MWe and the new let down turbine produces ~62 MWe for a total generator output of ~331 MWe. The gross output for this case is reduced by ~132 MWe or about 30% as compared to the Base Case.

For Cases 1-4 of the current study using the advanced MEA solvent, the $CO_2$ capture levels are 90%, 70%, 50%, and 30% respectively, the modified existing steam turbine generator produces 343-426 MWe and the new letdown turbine produces 45-15 MWe for a total generator output of 388-441 MWe. The gross output is reduced by 23-75 MWe or 5%-17% for these cases. The total output is nearly a linear function of $CO_2$ recovery level. Figure 3-38 shows the total generator output for all the cases included in the study. The crosshatched bar shows the output of Case 5/Concept A of the previous study.

Comparison of total generator output for Case 5/Concept A from the original study (Bozzuto et al., 2001), and the advanced MEA 90% capture case of the current study indicates the impact of three primary differences between the designs as listed below:

- Reduced steam extraction required for the advanced MEA solvent regeneration
- Heat integration between the $CO_2$ capture/compression/liquefaction equipment and the existing steam/water cycle
- Reduced reboiler operating pressure

An improvement of about 57 MWe in total generator output is realized with the advanced MEA solvent case, which represents an improvement of about 17% on total generator output reduction. Correcting to a common $CO_2$ recovery percentage of ~96% would be expected to reduce this improvement to about 16%.

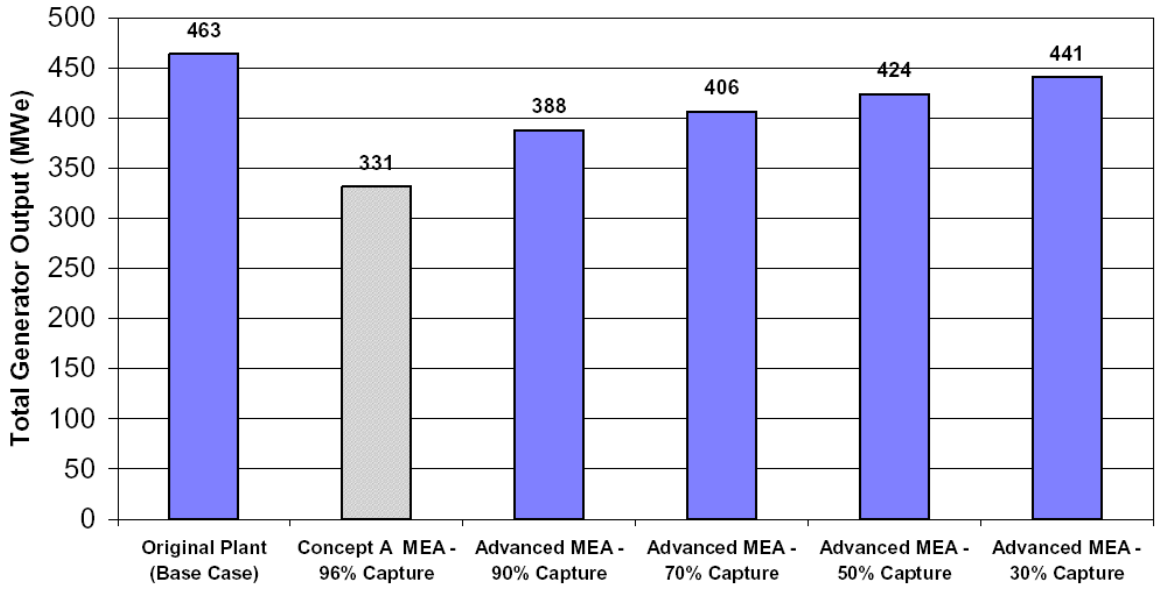


**Figure 3-38: Total Generator Output (existing + new let down turbine generator)**

### 3.2.5 Boiler Performance

The Base Case, updated Case 5/Concept A, and the four new $CO_2$ capture cases (Cases 1-4) were all analyzed based on the existing boiler producing a main steam flow of 395 kg/s (3,131,619 lbm/hr) at conditions of 538°C and 175 bara (1,000°F and 2,535 psia) at the steam turbine. This main steam flow represents the maximum continuous rating (MCR) for the existing unit. All six

cases also provided reheat steam to the steam turbine at 538°C (1,000° F). The boiler performance for the Base Case, updated Case 5/Concept A, and the four new $CO_2$ capture cases (Cases 1-4) was identical. Boiler efficiency for each of these six cases is 88.13%.

## 3.3 Cost Analysis

The project capital cost estimates (Total Investment Cost [TIC]) for all five cases, including engineering, procurement, and construction (EPC basis) and process and project contingencies, are presented in this section. All costs were estimated in July 2006 U.S. dollars. These costs include all required equipment to complete the retrofit such as the new advanced amine-based $CO_2$ scrubbing system, the new $CO_2$ compression, dehydration, and liquefaction system, the modified FGD system, the new let down steam turbine generator, and the existing steam cycle modifications.

Operating and maintenance (O&M) costs were calculated for all systems. The O&M costs for the Base Case (Conesville #5 Unit) were provided by American Electric Power (AEP). For the retrofit $CO_2$ capture system evaluations, additional O&M costs were calculated for the new equipment. The variable operating and maintenance (VOM) costs for the new equipment included such categories as chemicals and desiccants, waste handling, maintenance material and labor, contracted services, and make-up power cost (MUPC) from the reduction in net electricity production. The fixed operating and maintenance (FOM) costs for the new equipment includes operating labor only.

### 3.3.1 Cost Estimation Basis

The following assumptions were made in developing these cost estimates for each concept evaluated:

- July 2006 U.S. dollars
- Outdoor installation
- Investment in new utility systems is outside the scope
- $CO_2$ product pipeline is outside the scope
- No special limitations for transportation of large equipment
- No protection against unusual airborne contaminants (dust, salt, etc.)
- No unusual wind storms
- No earthquakes
- No piling required
- All releases can go to atmosphere – no flare provided
- $CO_2$ Product Pump designed to API standards, all other pumps conform to ANSI
- All heat exchangers designed to TEMA “C”
- All vessels are designed to ASME Section VIII, Div 1.

- Annual operating time is 7,446 hr/yr (85% capacity factor)
- The investment cost estimate was developed as a factored estimate based on in-house data for the major equipment. Such an estimate can be expected to have accuracy of +/- 30%.
- Process and project contingency were added to the EPC to derive the TIC.
- Make-up power cost was assessed at a 20-year levelized rate of 6.40 ¢/kWh (equivalent to a new Subcritical Pulverized Coal (Greenfield) Plant without carbon capture)
- No purchases of utilities or charges for shutdown time have been charged against the project

Other exclusions from the cost estimate are as follows:

- Soil investigation
- Environmental permits
- Disposal of hazardous or toxic waste
- Disposal of existing materials
- Custom's and Import duties
- Sales/use tax
- Forward escalation
- Capital spare parts
- Chemical loading facilities
- Buildings except for compressor building and electrical substation
- Financing cost
- Owners cost
- Guards during construction
- Site medical and ambulance service
- Cost & fees of authorities
- Overhead high voltage feed lines
- Cost to run a natural gas pipeline to the plant
- Excessive piling
- Contingency and risk

The costs used for consumption of fuel and chemicals in this project are shown in Table 3-49.

**Table 3-49: Prices for Consumables**

| Consumables | ($/lbm) | ($/kg) |
|---|---|---|
| MEA | 0.95 | 2.09 |
| Soda Ash | 0.26 | 0.56 |
| Corrosion Inhibitor | 3.00 | 6.61 |
| Activated Carbon | 1.00 | 2.20 |
| Molecular Sieve | 2.00 | 4.41 |
| Diatomacious Earth | 1.25 | 2.75 |
| | **($/10$^6$ Btu)** | **($/GJ)** |
| Coal | 1.80 | 1.90 |
| Natural Gas | 6.75 | 7.12 |

The project and process contingencies applied to the capital expenditures are shown in Table 3-50. The capital cost estimate provided for the $CO_2$ separation and compression system includes the let down steam turbine; therefore, the project and process contingency for carbon capture was applied to the let down steam turbine by default.

**Table 3-50: Project and Process Contingencies**

| Capital Equipment | Project Contingency* | Process Contingency* |
|---|---|---|
| $CO_2$ Separation and Compression System | 25% | 18% |
| Flue Gas Desulfurization (FGD) System | 11% | 0% |
| Let Down Steam Turbine | 25% | 18% |

*Percent of bare erected cost (i.e., sub-total direct cost in the investment tables for each case).

### 3.3.2 Carbon Dioxide Separation and Compression System Costs

This section shows both investment and operating and maintenance cost estimates for the Carbon Dioxide Separation and Compression Systems developed in this study. Five separate cost estimates for both the investment and O&M costs are provided in this section. There are four estimates provided for the 90%, 70%, 50%, and 30% $CO_2$ capture levels of the current study (Cases 1-4 respectively), which used an advanced amine. There is one additional cost estimate (Case 5) which is simply an update of Concept A (96% $CO_2$ capture) of the previous study (Bozzuto et al., 2001) to July 2006 U.S. dollars for comparison purposes. Case 5 used the Kerr McGee/ABB Lummus amine system.

#### 3.3.2.1 Case 1 - 90% $CO_2$ Capture with Advanced Amine System

**Investment Cost:**

Table 3-51 shows investment costs for the $CO_2$ Separation and Compression System designed to capture 90% of the $CO_2$ contained in the Conesville #5 flue gas stream. Included in this table (Acc't. Code - 14200) are the steam cycle modification costs as well as the costs for the new let down turbine and associated electric generator. The steam cycle modifications were described

previously in Section 3.1.3. The Total Investment Cost (TIC) of this equipment is $377,829,000. The expected level of accuracy for this cost estimate is +/-30%.

**Table 3-51: Case 1 (90% Capture) $CO_2$ Separation and Compression System Investment Costs**

| Acc't Code | Description | Pieces | Direct Manhours | Labor ($1,000) | Material ($1,000) | Total ($1,000) | % |
|---|---|---|---|---|---|---|---|
| 11000 | Heaters | | | | | | 0.00% |
| 11200 | Exchangers & Aircoolers | | 25,200 | 466 | 19,049 | 19,515 | 5.17% |
| 12000 | Vessel / Filters | | 6,638 | 123 | 5,018 | 5,141 | 1.36% |
| 12100 | Towers / Internals | | 29,859 | 552 | 22,571 | 23,123 | 6.12% |
| 12200 | Reactors | | | | | | 0.00% |
| 13000 | Tanks | | | | | | 0.00% |
| 14100 | Pumps | | 4,431 | 82 | 3,350 | 3,432 | 0.91% |
| 14200 | Compressors | | 60,663 | 1,122 | 45,856 | 46,978 | 12.43% |
| 18000 | Special Equipment | | 5,070 | 94 | 3,833 | 3,926 | 1.04% |
| | **Sub-Total Equipment** | **140** | **131,862** | **2,439** | **99,676** | **102,115** | **27.03%** |
| 21000 | Civil | | 175,815 | 3,253 | 6,977 | 10,230 | 2.71% |
| 21100 | Site Preparation | | | | | | 0.00% |
| 22000 | Structures | | 46,152 | 854 | 4,087 | 4,941 | 1.31% |
| 23000 | Buildings | | 24,175 | 447 | 1,196 | 1,643 | 0.43% |
| 30000 | Piping | | 362,619 | 6,708 | 17,942 | 24,650 | 6.52% |
| 40000 | Electrical | | 186,804 | 3,456 | 7,974 | 11,430 | 3.03% |
| 50000 | Instruments | | 153,839 | 2,846 | 12,460 | 15,306 | 4.05% |
| 61100 | Insulation | | 131,862 | 2,439 | 5,183 | 7,623 | 2.02% |
| 61200 | Fireproofing | | 65,931 | 1,220 | 1,495 | 2,715 | 0.72% |
| 61300 | Painting | | 32,965 | 610 | 698 | 1,308 | 0.35% |
| | **Sub-Total Commodities** | | **1,180,161** | **21,833** | **58,011** | **79,844** | **21.13%** |
| 70000 | Construction Indirects | | | | | 35,228 | 9.32% |
| | **Sub-Total Direct Cost (Bare Erected Cost)** | | **1,312,023** | **24,272** | **157,687** | **217,188** | **57.48%** |
| 71000 | Construction Management | | | | | 2,000 | 0.53% |
| 80000 | Home Office Engineering | | | | | 29,400 | 7.78% |
| 80000 | Basic Engineering | | | | | 5,000 | 1.32% |
| 95000 | License Fee | Excluded | | | | | 0.00% |
| 19400 | Vendor Reps | | | | | 1,750 | 0.46% |
| 19300 | Spare parts | | | | | 2,900 | 0.77% |
| 80000 | Training cost | Excluded | | | | | 0.00% |
| 80000 | Commissioning | Excluded | | | | | 0.00% |
| 19200 | Catalyst & Chemicals | Excluded | | | | | 0.00% |
| 97000 | Freight | | | | | 4,700 | 1.24% |
| 96000 | CGL / BAR Insurance | | | | | | 0.00% |
| 91400 | Escalation to July 2006 Dollars | | | | | 7,200 | 1.91% |
| | **Total Base Cost** | | | | | **270,138** | **71.50%** |
| | Contractors Fee | | | | | 14,300 | 3.78% |
| | **Total (EPC):** | | | | | **284,438** | **75.28%** |
| 93000 | Project Contingency | | | | | 54,297 | 14.37% |
| 93000 | Process Contingency | | | | | 39,094 | 10.35% |
| | **Total Investment Cost (TIC):** | | | | | **377,829** | **100.00%** |

Exclusions: bonds, taxes, import duties, hazardous material handling & disposal, capital spare parts, catalyst & chemicals, commissioning and initial operations, buildings other than control room & MCC.

**Operating and Maintenance Cost:**

Table 3-52 shows O&M costs for the $CO_2$ Separation and Compression System for the 90% $CO_2$ Capture Case. The variable, feedstock, and make-up power costs are reported at the 85% capacity factor. The make-up power cost represents the levelized cost over a 20-year period. All other costs represent first year operating costs.

**Table 3-52: Case 1 (90% Capture) $CO_2$ Separation and Compression System Operating & Maintenance Costs**

| Operating & Maintenance Costs | Subtotal ($1000/yr) | Total ($1000/yr) |
|---|---|---|
| Fixed O&M Costs | | 2,494 |
| Operating Labor | 2,494 | |
| Variable O&M Costs | | 17,645 |
| Chemicals | 10,161 | |
| Waste Handling & Contracted Services | 767 | |
| Maintenance (Materials and Labor) | 6,716 | |
| Feedstock O&M Costs | | 653 |
| Natural Gas | 653 | |
| Levelized, Make-up Power Cost | | 62,194 |
| Levelized, Make-up Power Cost (@ $6.40 ¢/kWh) | 62,194 | |

### 3.3.2.2 Case 2 - 70% $CO_2$ Capture with Advanced Amine System

**Investment Cost:**

Table 3-53 shows investment costs for the $CO_2$ Separation and Compression System designed to capture 70% of the $CO_2$ contained in the Conesville #5 flue gas stream. Included in the table (Acc't. Code - 14200) are the steam cycle modification costs and the costs for the new let down turbine and associated electric generator. The steam cycle modifications were described previously in Section 3.1.3. The Total Investment Cost (TIC) of this equipment is $342,805,000. The expected level of accuracy for this cost estimate is +/-30%.

**Table 3-53: Case 2 (70% Capture) $CO_2$ Separation and Compression System Investment Costs**

| Acc't Code | Description | Pieces | Direct Manhours | Labor ($1,000) | Material ($1,000) | Total ($1,000) | % |
|---|---|---|---|---|---|---|---|
| 11000 | Heaters | | | | | | 0.00% |
| 11200 | Exchangers & Aircoolers | | 20,664 | 382 | 15,620 | 16,002 | 4.67% |
| 12000 | Vessel / Filters | | 5,605 | 104 | 4,237 | 4,340 | 1.27% |
| 12100 | Towers / Internals | | 26,482 | 490 | 20,018 | 20,508 | 5.98% |
| 12200 | Reactors | | | | | | 0.00% |
| 13000 | Tanks | | | | | | 0.00% |
| 14100 | Pumps | | 3,402 | 63 | 2,572 | 2,635 | 0.77% |
| 14200 | Compressors | | 57,726 | 1,068 | 43,636 | 44,704 | 13.04% |
| 18000 | Special Equipment | | 4,841 | 90 | 3,659 | 3,749 | 1.09% |
| | **Sub-Total Equipment** | **133** | **118,720** | **2,197** | **89,742** | **91,938** | **23.37%** |
| 21000 | Civil | | 158,293 | 2,928 | 6,282 | 9,210 | 2.69% |
| 21100 | Site Preparation | | | | | | 0.00% |
| 22000 | Structures | | 41,552 | 769 | 3,679 | 4,448 | 1.30% |
| 23000 | Buildings | | 21,765 | 403 | 1,077 | 1,480 | 0.43% |
| 30000 | Piping | | 326,480 | 6,040 | 16,154 | 22,193 | 6.47% |
| 40000 | Electrical | | 168,187 | 3,111 | 7,179 | 10,291 | 3.00% |
| 50000 | Instruments | | 138,507 | 2,562 | 11,218 | 13,780 | 4.02% |
| 61100 | Insulation | | 118,720 | 2,196 | 4,667 | 6,863 | 2.00% |
| 61200 | Fireproofing | | 59,360 | 1,098 | 1,346 | 2,444 | 0.71% |
| 61300 | Painting | | 29,680 | 549 | 628 | 1,177 | 0.34% |
| | **Sub-Total Commodities** | | **1,062,544** | **19,656** | **52,230** | **71,886** | **20.97%** |
| 70000 | Construction Indirects | | | | | 31,717 | 9.25% |
| | **Sub-Total Direct Cost (Bare Erected Cost)** | | **181,263** | **21,853** | **141,972** | **195,542** | **57.04%** |
| 71000 | Construction Management | | | | | 2,000 | 0.58% |
| 80000 | Home Office Engineering | | | | | 27,930 | 8.15% |
| 80000 | Basic Engineering | | | | | 5,000 | 1.46% |
| 95000 | License Fee | Excluded | | | | | 0.00% |
| 19400 | Vendor Reps | | | | | 1,750 | 0.51% |
| 19300 | Spare parts | | | | | 2,600 | 0.76% |
| 80000 | Training cost | Excluded | | | | | 0.00% |
| 80000 | Commissioning | Excluded | | | | | 0.00% |
| 19200 | Catalyst & Chemicals | Excluded | | | | | 0.00% |
| 97000 | Freight | | | | | 4,300 | 1.25% |
| 96000 | CGL / BAR Insurance | | | | | | 0.00% |
| 91400 | Escalation to July 2006 Dollars | | | | | 6,600 | 1.93% |
| | **Total Base Cost** | | | | | **245,722** | **71.68%** |
| | Contractors Fee | | | | | 13,000 | 3.79% |
| | **Total (EPC):** | | | | | **258,722** | **75.47%** |
| 93000 | Project Contingency | | | | | 48,886 | 14.26% |
| 93000 | Process Contingency | | | | | 35,198 | 10.27% |
| | **Total Investment Cost (TIC):** | | | | | **342,805** | **100.00%** |

Exclusions: bonds, taxes, import duties, hazardous material handling & disposal, capital spare parts, catalyst & chemicals, commissioning and initial operations, buildings other than control room & MCC.

**Operating and Maintenance Cost:**

Table 3-54 shows O&M costs for the $CO_2$ Separation and Compression System for the 70% $CO_2$ Capture Case. The variable, feedstock, and make-up power costs are reported at the 85% capacity factor. The make-up power cost represents the levelized cost over a 20-year period. All other costs represent first year operating costs.

**Table 3-54: Case 2 (70% Capture) $CO_2$ Separation and Compression System Operating & Maintenance Costs**

| Operating & Maintenance Costs | Subtotal ($1000/yr) | Total ($1000/yr) |
|---|---|---|
| Fixed O&M Costs | | 2,284 |
| Operating Labor | 2,284 | |
| Variable O&M Costs | | 14,711 |
| Chemicals | 8,005 | |
| Waste Handling & Contracted Services | 597 | |
| Maintenance (Materials and Labor) | 6,109 | |
| Feedstock O&M Costs | | 488 |
| Natural Gas | 488 | |
| Levelized, Make-up Power Cost | | 47,926 |
| Levelized, Make-up Power Cost (@ $6.40 ¢/kWh) | 47,926 | |

3.3.2.3 Case 3 – 50% $CO_2$ capture with Advanced Amine Systems

**Investment Cost:**

Table 3-55 shows investment costs for the $CO_2$ Separation and Compression System designed to capture 50% of the $CO_2$ contained in the Conesville #5 flue gas stream. Included in this table (Acc't. Code - 14200) are the steam cycle modification costs as well as the costs for the new let down turbine and associated electric generator. The steam cycle modifications were described previously in Section 3.1.3. The Total Investment Cost (TIC) of this equipment is $258,390,000. The expected level of accuracy for this cost estimate is +/-30%.

**Table 3-55: Case 3 (50% Capture) $CO_2$ Separation and Compression System Investment Costs**

| Acc't Code | Description | Pieces | Direct Manhours | Labor ($1,000) | Material ($1,000) | Total ($1,000) | % |
|---|---|---|---|---|---|---|---|
| 11000 | Heaters | | | | | | 0.00% |
| 11200 | Exchangers & Aircoolers | | 15,864 | 293 | 11,992 | 12,285 | 4.75% |
| 12000 | Vessel / Filters | | 4,051 | 75 | 3,063 | 3,137 | 1.21% |
| 12100 | Towers / Internals | | 23,202 | 429 | 17,538 | 17,968 | 6.95% |
| 12200 | Reactors | | | | | | 0.00% |
| 13000 | Tanks | | | | | | 0.00% |
| 14100 | Pumps | | 2,776 | 51 | 2,098 | 2,150 | 0.83% |
| 14200 | Compressors | | 38,200 | 707 | 28,876 | 29,583 | 11.45% |
| 18000 | Special Equipment | | 3,864 | 71 | 2,921 | 2,992 | 1.16% |
| | **Sub-Total Equipment** | **107** | **87,957** | **1,626** | **66,488** | **68,115** | **17.32%** |
| 21000 | Civil | | 117,276 | 2,170 | 4,654 | 6,824 | 2.64% |
| 21100 | Site Preparation | | | | | | 0.00% |
| 22000 | Structures | | 30,785 | 570 | 2,726 | 3,296 | 1.28% |
| 23000 | Buildings | | 16,126 | 298 | 798 | 1,096 | 0.42% |
| 30000 | Piping | | 241,883 | 4,475 | 11,968 | 16,443 | 6.36% |
| 40000 | Electrical | | 124,606 | 2,305 | 5,319 | 7,624 | 2.95% |
| 50000 | Instruments | | 102,617 | 1,898 | 8,311 | 10,209 | 3.95% |
| 61100 | Insulation | | 87,957 | 1,627 | 3,457 | 5,085 | 1.97% |
| 61200 | Fireproofing | | 43,979 | 814 | 997 | 1,811 | 0.70% |
| 61300 | Painting | | 21,989 | 407 | 465 | 872 | 0.34% |
| | **Sub-Total Commodities** | | **787,218** | **14,564** | **38,695** | **53,260** | **20.61%** |
| 70000 | Construction Indirects | | | | | 23,498 | 9.09% |
| | **Sub-Total Direct Cost (Bare Erected Cost)** | | | | | **144,874** | **56.07%** |
| 71000 | Construction Management | | | | | 2,000 | 0.77% |
| 80000 | Home Office Engineering | | | | | 22,470 | 8.70% |
| 80000 | Basic Engineering | | | | | 5,000 | 1.94% |
| 95000 | License Fee | Excluded | | | | | 0.00% |
| 19400 | Vendor Reps | | | | | 1,750 | 0.68% |
| 19300 | Spare parts | | | | | 1,900 | 0.74% |
| 80000 | Training cost | Excluded | | | | | 0.00% |
| 80000 | Commissioning | Excluded | | | | | 0.00% |
| 19200 | Catalyst & Chemicals | Excluded | | | | | 0.00% |
| 97000 | Freight | | | | | 3,200 | 1.24% |
| 96000 | CGL / BAR Insurance | | | | | | 0.00% |
| 91400 | Escalation to July 2006 Dollars | | | | | 5,000 | 1.94% |
| | **Total Base Cost** | | | | | **186,194** | **72.06%** |
| | Contractors Fee | | | | | 9,900 | 3.83% |
| | **Total (EPC):** | | | | | **196,094** | **75.89%** |
| 93000 | Project Contingency | | | | | 36,219 | 14.02% |
| 93000 | Process Contingency | | | | | 26,077 | 10.09% |
| | **Total Investment Cost (TIC):** | | | | | **258,390** | **100.00%** |

Exclusions: bonds, taxes, import duties, hazardous material handling & disposal, capital spare parts, catalyst & chemicals, commissioning and initial operations, buildings other than control room & MCC.

**Operating and Maintenance Cost:**

Table 3-56 shows O&M costs for the $CO_2$ Separation and Compression System for the 50% $CO_2$ Capture Case. The variable, feedstock, and make-up power costs are reported at the 85% capacity factor. The make-up power cost represents the levelized cost over a 20-year period. All other costs represent first year operating costs.

**Table 3-56: Case 3 (50% Capture) $CO_2$ Separation and Compression System Operating & Maintenance Costs**

| Operating & Maintenance Costs | Subtotal ($1000/yr) | Total ($1000/yr) |
|---|---|---|
| Fixed O&M Costs | | 2,079 |
| Operating Labor | 2,079 | |
| Variable O&M Costs | | 10,876 |
| Chemicals | 5,820 | |
| Waste Handling & Contracted Services | 426 | |
| Maintenance (Materials and Labor) | 4,630 | |
| Feedstock O&M Costs | | 337 |
| Natural Gas | 337 | |
| Levelized, Make-up Power Cost | | 33,768 |
| Levelized, Make-up Power Cost (@ $6.40 ¢/kWh) | 33,738 | |

### 3.3.2.4 Case 4 - 30% $CO_2$ Capture with Advanced Amine System

**Investment Cost:**

Table 3-57 shows investment costs for the $CO_2$ Separation and Compression System designed to capture 30% of the $CO_2$ contained in the Conesville #5 flue gas stream. Included in this table (Acc't. Code - 14200) are the steam cycle modification costs as well as the costs for the new let down turbine and associated electric generator. The steam cycle modifications were described previously in Section 3.1.3. The Total Investment Cost (TIC) of this equipment is $189,570,000. The expected level of accuracy for this cost estimate is +/-30%.

**Table 3-57: Case 4 (30% Capture) $CO_2$ Separation and Compression System Investment Costs**

| Acc't Code | Description | Pieces | Direct Manhours | Labor ($1,000) | Material ($1,000) | Total ($1,000) | % |
|---|---|---|---|---|---|---|---|
| 11000 | Heaters | | | | | | 0.00% |
| 11200 | Exchangers & Aircoolers | | 10,123 | 187 | 7,652 | 7,839 | 4.14% |
| 12000 | Vessel / Filters | | 2,413 | 45 | 1,824 | 1,869 | 0.99% |
| 12100 | Towers / Internals | | 12,745 | 236 | 9,634 | 9,870 | 5.21% |
| 12200 | Reactors | | | | | | 0.00% |
| 13000 | Tanks | | | | | | 0.00% |
| 14100 | Pumps | | 1,728 | 32 | 1,306 | 1,338 | 0.71% |
| 14200 | Compressors | | 34,761 | 643 | 26,276 | 26,919 | 14.20% |
| 18000 | Special Equipment | | 2,137 | 40 | 1,615 | 1,655 | 0.87% |
| | **Sub-Total Equipment** | **65** | **63,907** | **1,183** | **48,307** | **49,490** | **12.58%** |
| 21000 | Civil | | 85,208 | 1,576 | 3,382 | 4,958 | 2.62% |
| 21100 | Site Preparation | | | | | | 0.00% |
| 22000 | Structures | | 22,367 | 414 | 1,981 | 2,394 | 1.26% |
| 23000 | Buildings | | 11,716 | 217 | 580 | 796 | 0.42% |
| 30000 | Piping | | 175,742 | 3,251 | 8,695 | 11,947 | 6.30% |
| 40000 | Electrical | | 90,534 | 1,675 | 3,865 | 5,539 | 2.92% |
| 50000 | Instruments | | 74,557 | 1,379 | 6,038 | 7,418 | 3.91% |
| 61100 | Insulation | | 63,906 | 1,182 | 2,512 | 3,694 | 1.95% |
| 61200 | Fireproofing | | 31,953 | 591 | 725 | 1,316 | 0.69% |
| 61300 | Painting | | 15,977 | 296 | 338 | 634 | 0.33% |
| | **Sub-Total Commodities** | | **101,185** | **10,581** | **28,116** | **38,696** | **20.41%** |
| 70000 | Construction Indirects | | | | | 17,073 | 9.01% |
| | **Sub-Total Direct Cost (Bare Erected Cost)** | | **635,868** | **11,764** | **76,423** | **105,259** | **55.53%** |
| 71000 | Construction Management | | | | | 2,000 | 1.06% |
| 80000 | Home Office Engineering | | | | | 15,600 | 8.23% |
| 80000 | Basic Engineering | | | | | 5,000 | 2.64% |
| 95000 | License Fee | Excluded | | | | | 0.00% |
| 19400 | Vendor Reps | | | | | 1,750 | 0.92% |
| 19300 | Spare parts | | | | | 1,400 | 0.74% |
| 80000 | Training cost | Excluded | | | | | 0.00% |
| 80000 | Commissioning | Excluded | | | | | 0.00% |
| 19200 | Catalyst & Chemicals | Excluded | | | | | 0.00% |
| 97000 | Freight | | | | | 2,300 | 1.21% |
| 96000 | CGL / BAR Insurance | | | | | | 0.00% |
| 91400 | Escalation to July 2006 Dollars | | | | | 3,700 | 1.95% |
| | **Total Base Cost** | | | | | **137,009** | **72.27%** |
| | Contractors Fee | | | | | 7,300 | 3.85% |
| | **Total (EPC):** | | | | | **144,309** | **76.12%** |
| 93000 | Project Contingency | | | | | 26,315 | 13.88% |
| 93000 | Process Contingency | | | | | 18,947 | 9.99% |
| | **Total Investment Cost (TIC):** | | | | | **189,570** | **100.00%** |

Exclusions: bonds, taxes, import duties, hazardous material handling & disposal, capital spare parts, catalyst & chemicals, commissioning and initial operations, buildings other than control room & MCC.

**Operating and Maintenance Cost:**

Table 3-58 shows O&M costs for the $CO_2$ Separation and Compression System for the 30% $CO_2$ Capture Case. The variable, feedstock, and make-up power costs are reported at the 85% capacity factor. The make-up power cost represents the levelized cost over a 20-year period. All other costs represent first year operating costs.

**Table 3-58: Case 4 (30% Capture) $CO_2$ Separation and Compression System Operating & Maintenance Costs**

| Operating & Maintenance Costs | Subtotal ($1000/yr) | Total ($1000/yr) |
|---|---|---|
| Fixed O&M Costs | | 1,869 |
| Operating Labor | 1,869 | |
| Variable O&M Costs | | 7,019 |
| Chemicals | 3,408 | |
| Waste Handling & Contracted Services | 256 | |
| Maintenance (Materials and Labor) | 3,355 | |
| Feedstock O&M Costs | | 211 |
| Natural Gas | 211 | |
| Levelized, Make-up Power Cost | | 19,885 |
| Levelized, Make-up Power Cost (@ $6.40 ¢/kWh) | 19,885 | |

3.3.2.5 Case 5/Concept A – 96% Capture with Kerr McGee/ABB Lummus amine system (costs updated from previous study)

**Investment Cost:**

Table 3-59 shows investment costs for the Case 5/Concept A $CO_2$ Separation and Compression System, which uses the Kerr McGee/ABB Lummus amine system. The costs shown in this table are the costs from the 2000 study (Bozzuto et al., 2001) escalated to 2006 dollars (1.3017 escalation factor). Included in this table (Acc't. Code - 14200) are the steam cycle modification costs as well as the new let down turbine and associated electric generator. The steam cycle modifications were described in Section 3.1.3. The Total Investment Cost (TIC) of this equipment is $678,792,517. The expected level of accuracy for this cost estimate is +/- 30%.

**Table 3-59: Case 5/Concept A (96% Capture) $CO_2$ Separation and Compression System Investment Costs**

| Acc't Code | Description | Pieces | Direct Manhours | Labor ($1,000) | Material ($1,000) | Total ($1,000) | % |
|---|---|---|---|---|---|---|---|
| 11000 | Heaters | | | | | | 0.00% |
| 11200 | Exchangers & Aircoolers | | 44,970 | 907 | 37,074 | 37,981 | 5.60% |
| 12000 | Vessel / Filters | | 5,776 | 117 | 4,762 | 4,879 | 0.72% |
| 12100 | Towers / Internals | | 43,200 | 872 | 35,615 | 36,487 | 5.38% |
| 12200 | Reactors | | | | | | 0.00% |
| 13000 | Tanks | | | | | | 0.00% |
| 14100 | Pumps | | 10,078 | 203 | 8,309 | 8,512 | 1.25% |
| 14200 | Compressors | | 100,925 | 2,036 | 83,203 | 85,239 | 12.56% |
| 18000 | Special Equipment | | 10,991 | 221 | 9,061 | 9,282 | 1.37% |
| | **Sub-Total Equipment** | **436** | **215,940** | **4,357** | **178,023** | **182,380** | **26.87%** |
| 21000 | Civil | | 287,919 | 5,809 | 12,461 | 18,271 | 2.69% |
| 21100 | Site Preparation | | | | | | 0.00% |
| 22000 | Structures | | 75,579 | 1,524 | 7,299 | 8,823 | 1.30% |
| 23000 | Buildings | | 39,589 | 799 | 2,136 | 2,935 | 0.43% |
| 30000 | Piping | | 593,833 | 11,981 | 32,044 | 44,025 | 6.49% |
| 40000 | Electrical | | 305,914 | 6,173 | 14,242 | 20,415 | 3.01% |
| 50000 | Instruments | | 251,929 | 5,083 | 22,253 | 27,336 | 4.03% |
| 61100 | Insulation | | 215,939 | 4,357 | 9,258 | 13,614 | 2.01% |
| 61200 | Fireproofing | | 107,970 | 2,179 | 2,670 | 4,849 | 0.71% |
| 61300 | Painting | | 53,985 | 1,090 | 1,246 | 2,335 | 0.34% |
| | **Sub-Total Commodities** | | **1,932,657** | **38,995** | **103,608** | **142,603** | **21.01%** |
| 70000 | Construction Indirects | | | | | 62,928 | 9.27% |
| | **Sub-Total Direct Cost (Bare Erected Cost)** | | | | | **387,911** | **57.15%** |
| 71000 | Construction Management | | | | | 2,603 | 0.38% |
| 80000 | Home Office Engineering | | | | | 57,889 | 8.53% |
| 80000 | Basic Engineering | | | | | 6,509 | 0.96% |
| 95000 | License Fee | Excluded | | | | | 0.00% |
| 19400 | Vendor Reps | | | | | 3,254 | 0.48% |
| 19300 | Spare parts | | | | | 5,207 | 0.77% |
| 80000 | Training cost | Excluded | | | | | 0.00% |
| 80000 | Commission | Excluded | | | | | 0.00% |
| 19200 | Catalyst & Chemicals | Excluded | | | | | 0.00% |
| 97000 | Freight | | | | | 1,432 | 0.21% |
| 96000 | CGL / BAR Insurance | | | | | 8,461 | 1.25% |
| 91400 | Escalation to July 2001 Dollars | | | | | 13,017 | 1.92% |
| | **Total Base Cost** | | | | | **486,283** | **71.64%** |
| | Contractors Fee | | | | | 25,709 | 3.79% |
| | **Total (EPC):** | | | | | **511,991** | **75.43%** |
| 93000 | Project Contingency | | | | | 96,978 | 14.29% |
| 93000 | Process Contingency | | | | | 69,824 | 10.29% |
| | **Total Investment Cost (TIC):** | | | | | **678,793** | **100.00%** |

Exclusions: bonds, taxes, import duties, hazardous material handling & disposal, capital spare parts, catalyst & chemicals, commissioning and initial operations, buildings other than control room & MCC.

**Operating and Maintenance Cost:**

Table 3-60 shows O&M costs for the Case 5/Concept A $CO_2$ Separation and Compression System, which captures 96% of the carbon dioxide from the Conesville #5 flue gas stream. They amount to $132,809,000/yr.

**Table 3-60: Case 5/Concept A (96% Capture) $CO_2$ Separation and Compression System Operating & Maintenance Costs**

| Operating & Maintenance Costs | Subtotal ($1000/yr) | Total ($1000/yr) |
|---|---|---|
| Fixed O&M Costs | | 2,488 |
| Operating Labor | 2,488 | |
| Variable O&M Costs | | 18,640 |
| Chemicals | 4,870 | |
| Waste Handling & Contracted Services | 843 | |
| Maintenance (Materials and Labor) | $12,927 | |
| Feedstock O&M Costs | | 890 |
| Natural Gas | 890 | |
| Levelized, Make-up Power Cost | | 86,832 |
| Levelized, Make-up Power Cost (@ $6.40 ¢/kWh) | 86,832 | |

### 3.3.3 Boiler Modification Costs

For this project the Boiler Scope is defined as everything on the gas side upstream of the FGD System. Therefore, it includes equipment such as the steam generator, pulverizers, fans, ductwork, electrostatic precipitator (ESP), air heater, coal and ash handling systems, etc. Purposely not included in the boiler scope definition is the FGD system. The FGD system modification costs are shown separately in Section 3.3.4. For all the capture options investigated in this study (Cases 1-5), Boiler Scope is not modified from the Base Case configuration and, as such, there are no costs in this category.

### 3.3.4 Flue Gas Desulfurization System Modification Costs

Flue Gas Desulfurization System modification costs for these $CO_2$ capture options are relatively minor as compared to the other new equipment required. The Flue Gas Desulfurization System modifications, which include the addition of a secondary absorber island, building, booster fan, and ductwork, are described in Section 3.1.3. The total cost required for the Flue Gas Desulfurization (FGD) System scope modifications is $15,800,000 in January 2000 dollars. At an escalation rate of 4.12% per year for this type of equipment (Oil & Gas Journal, 2006), in July 2006 dollars EPC cost, is $20,540,000 $([15{,}800{,}000 * 1.0412]^{6.5})$. The bare erected cost of the FGD System was estimated to be $15,680,000 in July 2006 dollars. An 11% project contingency was added to the the FGD System cost, therefore, the TIC contribution is $22,264,800. This cost is applied to all the capture options investigated in this study (i.e., Cases 1-5). This estimate

includes material, engineering and construction. The expected level of accuracy for this cost estimate is +/- 10%.

### 3.3.5 Let Down Steam Turbine/Generator Costs

The MEA systems require significant quantities of heat for regeneration of the MEA solvent. Low-pressure steam is extracted from the existing turbine to provide the energy for solvent regeneration. The steam extraction location is the existing turbine IP/LP crossover pipe. This steam is expanded from ~200 psia to 65 psia for Case 5 or 47 psia for Cases 1-4 through a new "Let down" steam turbine/generator where electricity is produced. The exhaust steam leaving the new let down turbine provides the heat source for solvent regeneration in the reboilers of the MEA $CO_2$ recovery system. Table 3-61 shows the investment costs for the let down steam turbine generator (D&R cost basis). Although the costs shown for these turbines are on a D&R (Delivered and Representative) basis, construction costs and other balance of plant costs associated with these turbines are included for each case as a part of the $CO_2$ Separation and Compression System Investment Costs shown in Section 3.3.2.

**Table 3-61: Let Down Turbine Generator Costs and Electrical Outputs for Cases 1-5 (D&R Cost Basis)**

| Let Down Steam Turbine Costs (D&R Basis) | OCDO-A updated | Current Study | | | |
|---|---|---|---|---|---|
| **$CO_2$ Capture Percentage** | **96% (Case-5)** | **90% (Case-1)** | **70% (Case-2)** | **50% (Case-3)** | **30% (Case-4)** |
| Generator Cost ($10^3$ $) | 10,516 | 9,800 | 9,400 | 8,900 | 8,500 |
| Generator Output (kWe) | 62,081 | 45,321 | 35,170 | 25,031 | 14,898 |

### 3.3.6 Charges for Loss of Power During Construction

During the construction period for the new equipment, it is assumed the existing Conesville Unit #5 power plant will be operated in its normal way. The new $CO_2$ capture equipment is being located in three separate locations (see Appendix I for plant layout drawings), and it is assumed that the erection of this equipment will not impede the operation of Conesville Unit #5 or any of the other units on site. Once construction is completed, it has been assumed that the final connections between the $CO_2$ capture systems and the existing power plant can be completed during the annual outage for the unit. Final shakedown testing will be completed after the outage. Therefore, there are no charges for loss of power during construction.

### 3.3.7 Summary of Total Retrofit Investment Costs

Table 3-62 summarizes the total retrofit investment costs (TIC Basis) required for each of the five cases. The first column shows the costs for updated Case 5/Concept A from the previous study (Bozzuto et al., 2001), which captures ~96% of the $CO_2$. The last four columns show the costs for the current study (Cases 1-4) using the advanced MEA system. The costs include specific costs ($/kWe) on both a new and original kWe basis.

**Table 3-62: Total Retrofit Investment Costs (Cases 1-5)**

| Retrofit Cost Summary ($1000) | 2001 Study Updated | Current Study | | | |
|---|---|---|---|---|---|
| **$CO_2$ Capture Percentage** | **96% (Case-5)** | **90% (Case-1)** | **70% (Case-2)** | **50% (Case-3)** | **30% (Case-4)** |
| $CO_2$ Separation and Compression System | 668,277 | 368,029 | 333,406 | 249,490 | 181,070 |
| Flue Gas Desulfurization System | 22,265 | 22,265 | 22,265 | 22,265 | 22,265 |
| Let Down Steam Turbine Generator* | 10,516 | 9,800 | 9,400 | 8,900 | 8,500 |
| Boiler Modifications | | | | | |
| Total Retrofit/Investment Cost (i.e., TIC): | 701,057 | 400,094 | 365,070 | 280,655 | 211,835 |
| $/kW-new: | 2,786 | 1,319 | 1,095 | 773 | 540 |
| $/kW-original: | 1,616 | 922 | 842 | 647 | 488 |

*Engineering, construction management, overhead, fees, and contingency are Included in the $CO_2$ separation and compression system cost.

Figure 3-39 shows the specific investment costs ($/kWe) for each case. Two costs are plotted for each of the cases in this figure. The upper curve specific costs are relative to the new plant output, which is lower than the original (Base Case) due to added auxiliary power and reduced steam turbine output. The lower curve specific costs are relative to the original plant output of the Base Case.

By comparing the cost for the 96% capture case from the previous study with the cost for the 90% capture case from the current study, as shown in Figure 3-39s a significant cost reduction is indicated for the current study. The current study specific costs ($/kWe-new) are about half of what the updated previous study (96% capture case) results indicate. It should be pointed out that if Case 5 (~96% recovery) was designed as a part of the current study, it would likely have equipment selections similar to Case 1 (90% recovery) and therefore significant cost reductions and improved economics would result.

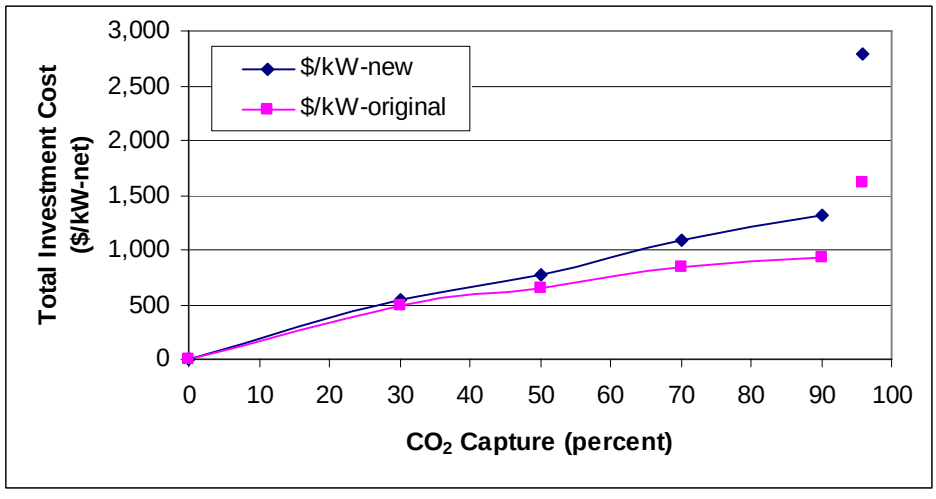


**Figure 3-39: New Equipment Specific Investment Costs**

The specific costs for the current study cases (Cases 1-4) are nearly a linear function of $CO_2$ recovery percentage. However, some economy of scale effects and other non-linearitys are evident. To help understand this non-linearity, a brief review of equipment selection is necessary.

Table 3-63 shows a summary of the major equipment selected for the $CO_2$ Removal, Compression, and Liquefaction Systems for all five cases. Three categories are shown in this table (Compressors, Towers/Internals, and Heat Exchangers). These three categories represent the three most costly accounts in the cost estimates for these systems. These accounts represent ~90% of the total equipment costs for these systems. A review of this table shows how the number of compression trains is reduced from two trains, for the 90% and 70% recovery cases, to one train for the 50% and 30% recovery cases. Similarly, the number of absorber/stripper trains is reduced from two trains for the 90%, 70%, and 50% recovery cases to one train for the 30% recovery. The heat selections show even more variation between the cases. Equipment sizes are also indicated in this table.

**Table 3-63: $CO_2$ Removal, Compression, and Liquefaction System Equipment Summary (Cases 1-5)**

| | 90% (Case-1) | | 70% (Case-2) | | 50% (Case-3) | | 30% (Case-4) | | 96% (Case-5) | |
|---|---|---|---|---|---|---|---|---|---|---|
| **Compressors** | **No.** | **HP ea** | **No.** | **HP ea** | **No.** | **HP ea** | **No.** | **HP ea** | **No.** | **HPea** |
| $CO_2$ Compressor | 2 | 15,600 | 2 | 12,100 | 1 | 17,300 | 1 | 10,400 | 7 | 4,500 |
| Propane Compressor | 2 | 11,700 | 2 | 10,200 | 1 | 14,600 | 1 | 8,800 | 7 | 3,100 |
| LP Let Down Turbine | 1 | 60,800 | 1 | 47,200 | 1 | 33,600 | 1 | 20,000 | 1 | 82,300 |
| **Towers/Internals** | **No.** | **ID/Height (ft)** | **No.** | **ID/Height (ft)** | **No.** | **ID/Height (ft)** | **No.** | **ID/Height (ft)** | **No.** | **ID/Height (ft)** |
| Absorber/Cooler | 2 | 34/126 | 2 | 30/126 | 2 | 25/126 | 1 | 28/126 | 5 | 27/126 |
| Stripper | 2 | 22/50 | 2 | 19/50 | 2 | 16/50 | 1 | 20/50 | 9 | 16/50 |
| **Heat Exchangers** | **No.** | **$10^6$ Btu/hr ea** | **No.** | **$10^6$ Btu/hr ea** | **No.** | **$10^6$ Btu/hr ea** | **No.** | **$10^6$ Btu/hr ea** | **No.** | **$10^6$ Btu/hr ea** |
| Reboilers | 10 | 120.0 | 8 | 120.0 | 6 | 120.0 | 4 | 120.0 | 9 | 217.0 |
| Solvent Stripper CW Condenser | 12 | 20.0 | 10 | 20.0 | 7 | 20.0 | 4 | 20.0 | 9 | 42.0 |
| Other Heat Exchangers / Average Duty | 36 | 61.0 | 35 | 57.0 | 25 | 62.0 | 16 | 58.0 | 113 | 36.0 |
| Total Heat Exchangers / Average Duty | 58 | 62.7 | 53 | 59.5 | 38 | 63.4 | 24 | 62.0 | 131 | 48.8 |

It should also be noted, as shown in Table 3-63, that the design of Case 5 (See Bozzuto et al., 2001) is not totally consistent with the design of Case 1 done in the current study, although the $CO_2$ recovery in each case is similar. Case 1 uses two (2) absorber trains, two stripper trains, and two compression trains. Conversely, Case 5, which was designed in 2000, used five absorber trains, nine stripper trains, and seven compression trains. Because of these differences, Case 1 is able to take advantage of economy of scale effects for equipment cost with the larger equipment sizes used in each train as compared to Case 5. Additionally, Case 5 equipment was all located about 457 m (1,500 ft) from the Unit #5/6 common stack, which also contributed to the increased the cost of Case 5 relative to Case 1.

All the costs shown above were used in the economic evaluation (Section 3.4) to develop incremental Cost of Electricity (COE) values and $CO_2$ mitigation cost comparisons.

## 3.4 Economic Analysis

A comprehensive economic evaluation comparing the Base Case study unit and various retrofit $CO_2$ capture scenarios using an advanced amine was performed. The purpose of the evaluation was to quantify the impact of $CO_2$ capture on the Cost of Electricity (COE) for this existing coal-fired unit. $CO_2$ mitigation costs were also determined in this analysis. The economic evaluation results are presented as incremental Costs of Electricity (levelized basis). The reported costs of electricity are incremental relative to the Base Case (air fired without $CO_2$ capture, i.e., business as usual).

Additionally, economic sensitivity studies were developed for each of the $CO_2$ capture options to highlight which parameters affected the incremental COE and $CO_2$ mitigation cost to the greatest extents. The sensitivity parameters chosen (Investment Cost, Capacity Factor, Make-up Power Cost, and $CO_2$ Selling Price) were judged to be the most important parameters to vary for this project. These parameters are either site-specific or there is uncertainty in their values in looking to the future. Therefore, proper use of the sensitivity results could potentially allow extrapolation of results for application to units other than the selected study unit (Conesville Unit #5).

The economic analysis was performed by Research and Development Solutions, Inc. (RDS) using the levelized revenue requirement method (a form of discounted cash flow analysis). The model has the capability to analyze the economic effects of different technologies based on differing capital costs, operating and maintenance costs, fuel costs, and cost of capital assumptions. The primary metrics are levelized cost of electricity (LCOE) and $CO_2$ mitigation cost. Both are reported on an incremental cost of $CO_2$ capture basis within this study. All cost data were provided by Alstom (see Section 3.3).

### 3.4.1 Economic Study Scope and Assumptions

A total of five $CO_2$ capture cases were evaluated in this economic analysis in addition to the Base Case without $CO_2$ capture:

- Case 1: 90% $CO_2$ capture with advanced “State of the Art” amine
- Case 2: 70% $CO_2$ capture with advanced “State of the Art” amine
- Case 3: 50% $CO_2$ capture with advanced “State of the Art” amine
- Case 4: 30% $CO_2$ capture with advanced “State of the Art” amine
- Case 5: 96% $CO_2$ capture with Kerr-McGee/ABB Lummus amine technology (ca. 2000)

Case 5 is simply an update of Concept A of the previous study (Bozzuto et al., 2001). As shown in Section 3.3.2.5, the investment and O&M costs of Concept A of the previous study were updated to July 2006 U.S. dollars. This information was used to update the economic analysis of Case 5 to a common basis with Cases 1-4.

The primary outputs from this economic analysis are the incremental Levelized Cost of Electricity (LCOE) and $CO_2$ mitigation costs relative to the Base Case. These two measures of economic merit were determined for all cases evaluated.

Incremental LCOE was calculated using a simplified model derived from the NETL Power Systems Financial Model for calculating levelized cost of electricity.[3] Total Plant Cost (TPC) was replaced with Total Investment Cost (TIC) to reflect the retrofit analyzed within this study. The term "Incremental COE" and "LCOE" are used synonymously within this report. The following equation was used to calculate the LCOE over a 20-year period.

$LCOE_P$ = levelized annual capital charge + levelized annual operating costs

$$\mathbf{LCOE_P = \frac{(CCF_P)(TPC) + [(LF_{F1})(OC_{F1}) + (LF_{F2})(OC_{F2}) + \ldots] + (CF)[(LF_{V1})(OC_{V1}) + (LF_{V2})(OC_{V2}) + \ldots]}{(CF)(KWH)}}$$

Where:

| | |
|---|---|
| LCOE = | levelized cost of electricity over P years |
| P = | levelization period (e.g., 10, 20, or 30 years) |
| CCF = | capital charge factor for a levelization period of P years |
| TIC = | total investment cost [the sum of bare erected costs (includes costs of process equipment, supporting facilities, direct and indirect labor), detailed design costs, construction/project management costs, project contingency, process contingency and technology fees] |
| $LF_{Fn}$ = | levelization factor for category n fixed operating cost |
| $OC_{Fn}$ = | category n fixed operating cost for the initial year of operation (but expressed in "first-year-of-construction" year dollars) |
| CF = | plant capacity factor |
| $LF_{Vn}$ = | levelization factor for category n variable operating cost |
| $OC_{Vn}$ = | category n variable operating cost at 100% capacity factor for the initial year of operation (but expressed in "first-year-of-construction" year dollars) |
| KWH = | annual net kilowatt-hours of power generated at 100% capacity factor |

All costs are expressed in "first-year-of-construction" year dollars, and the resulting LCOE is also expressed in "first-year-of-construction" year dollars (January 2007). $CO_2$ mitigation and capture costs were calculated according to the following equations.

**$CO_2$ Mitigation Cost** = $(LCOE_{Cp} - LCOE_{Ref}) / (CO_{2Ref\ emitted} - CO_{2Cp\ emitted})$

**$CO_2$ Captured Cost** = $(LCOE_{Cp} - LCOE_{Ref}) / (CO_{2Cp\ produced} - CO_{2Cp\ emitted})$

Where:

| | |
|---|---|
| $CO_2$ Mitigation Cost = | $/ton of $CO_2$ avoided |
| $CO_2$ Captured Cost = | $/ton of $CO_2$ removed |
| $CO_2$ = | Carbon dioxide (tons/kWh at plant capacity factor) |
| LCOE = | Levelized cost of electricity ($/kWh) |
| $_{Cp}$ = | Capture plant |
| $_{Ref}$ = | Reference plant |

[3] Power Systems Financial Model Version 5.0, September 2006.

**Economic Study Assumptions:**

The base assumptions used to evaluate the Base Case (i.e., without $CO_2$ capture) and all other $CO_2$ capture cases (Cases 1-5) are given in Table 3-64. This approach enabled the evaluation of the impacts of $CO_2$ capture in terms of incremental costs of electricity and $CO_2$ mitigations costs.

**Table 3-64: Base Economic Assumptions (Base Case and Cases 1-5)**

| Parameter | Unit | Value |
|---|---|---|
| Investment Cost | $/kW | as estimated |
| Capacity Factor | % | 85 |
| Income Tax Rate | % | 38 |
| Repayment Term of Debt | Years | 15 |
| Grace Period on Debt Repayment | Years | 0 |
| Debt Reserve Fund | | None |
| Depreciation (150% declining balance) | Years | 20 |
| Working Capital (all parameters) | $ | 0 |
| Investment Tax Credit | % | 0 |
| Tax Holiday | Years | 0 |
| Start-up Costs (% of EPC) | % | 2 |
| EPC Escalation | % | 0 |
| Duration of Construction | Years | 3 |
| Debt | % | 45 |
| Equity | % | 55 |
| After-tax Weighted Cost of Capital | % | 9.67 |
| Capital Charge Factor | - | 0.175 |
| Fixed O&M Levelization Factor | - | 1.1568 |
| Variable O&M Levelization Factor | - | 1.1568 |
| Natural Gas Levelization Factor | - | 1.1651 |

Table 3-65 compares the economic analysis results for Cases 1-5 to the Base Case (0% Capture). American Electric Power (AEP) provided the assumptions pertaining to the Base Case unit (i.e., Conesville #5 Unit) operating at a 72% capacity factor. The Base Case values were adjusted to an 85% capacity factor for comparison to Cases 1-5.

**Table 3-65: Economic Evaluation Study Assumptions (Base Case and Cases 1-5)**

| Percent $CO_2$ Capture (Case) | 0% (Base Case) | 90% (Case-1) | 70% (Case-2) | 50% (Case-3) | 30% (Case-4) | 96% (Case-5) |
|---|---|---|---|---|---|---|
| **Power Generation** | | | | | | |
| Net Output (MW) | 433.8 | 303.3 | 333.2 | 362.9 | 392.1 | 251.6 |
| Capacity Factor (%) | 85% | 85% | 85% | 85% | 85% | 85% |
| Operating Hours (hrs/yr) | 7,446 | 7,446 | 7,446 | 7,446 | 7,446 | 7,446 |
| Net Efficiency, HHV (%) | 35.0% | 24.5% | 26.9% | 29.3% | 31.7% | 20.3% |
| Net Plant Heat Rate, HHV (Btu/kWh) | 9,778 | 13,984 | 12,728 | 11,686 | 10,818 | 16,856 |
| Total Fuel Heat Input at MCR (MMBtu/hr) | 4,242 | 4,242 | 4,242 | 4,242 | 4,242 | 4,242 |
| Coal HHV Input (MMBtu/hr) | 4,229 | 4,229 | 4,229 | 4,229 | 4,229 | 4,229 |
| Net Generation (MWh/yr) | 3,230,075 | 2,258,498 | 2,481,342 | 2,702,488 | 2,919,331 | 1,873,667 |
| | | | | | | |
| **Costs** | | | | | | |
| Total Investment Cost ($1000s) | NA | 400,094 | 365,070 | 280,655 | 211,835 | 701,057 |
| Total Investment Cost ($/kW) | NA | 1,319 | 1,095 | 773 | 540 | 2,786 |
| | | | | | | |
| Fixed O&M Costs ($1000/yr) | 0 | 2,494 | 2,284 | 2,079 | 1,869 | 2,488 |
| | | | | | | |
| Variable O&M Costs ($1000/yr) | 0 | 17,645 | 14,711 | 10,876 | 7,019 | 18,640 |
| | | | | | | |
| Levelized, Make-up Power Cost | | | | | | |
| Make-up Power Cost (¢/kWh) | NA | 6.40 | 6.40 | 6.40 | 6.40 | 6.40 |
| Make-up Power Cost ($1000/yr) | 0 | 62,194 | 47,926 | 33,768 | 19,885 | 86,832 |
| | | | | | | |
| $CO_2$ By-product Revenue | | | | | | |
| $CO_2$ By-product Selling Price ($/ton) | 0 | 0 | 0 | 0 | 0 | 0 |
| $CO_2$ By-product (lb/hr) | 866,102 | 779,775 | 607,048 | 433,606 | 260,163 | 835,053 |
| $CO_2$ By-product Revenue ($1000/yr) | 0 | 0 | 0 | 0 | 0 | 0 |
| | | | | | | |
| Feedstock O&M Costs | | | | | | |
| Coal Price ($/MMBtu) | 1.80 | 1.80 | 1.80 | 1.80 | 1.80 | 1.80 |
| Coal for $CO_2$ System (MMBtu/hr) | 0 | 0 | 0 | 0 | 0 | 0 |
| Coal Cost ($1000/yr) | 0 | 0 | 0 | 0 | 0 | 0 |
| Natural Gas Price ($/MMBtu) | 6.75 | 6.75 | 6.75 | 6.75 | 6.75 | 6.75 |
| Natural Gas for $CO_2$ System (MMBtu/hr) | 0 | 13.00 | 9.70 | 6.70 | 4.20 | 17.70 |
| Natural Gas Cost ($1000/yr) | 0 | 653 | 488 | 337 | 211 | 890 |
| | | | | | | |
| **LCOE Assumptions** | | | | | | |
| Levelization Term (years) | NA | 20 | 20 | 20 | 20 | 20 |
| Capital Charge Factor | NA | 0.175 | 0.175 | 0.175 | 0.175 | 0.175 |
| Fixed O&M Levelization Factor | NA | 1.1568 | 1.1568 | 1.1568 | 1.1568 | 1.1568 |
| Variable O&M Levelization Factor | NA | 1.1568 | 1.1568 | 1.1568 | 1.1568 | 1.1568 |
| Feedstock O&M Levelization Factor | NA | 1.1651 | 1.1651 | 1.1651 | 1.1651 | 1.1651 |
| | | | | | | |
| **LCOE Contributions** | | | | | | |
| Capital Component (¢/kWh) | NA | 3.10 | 2.57 | 1.82 | 1.27 | 6.55 |
| Fixed O&M (¢/kWh) | NA | 0.13 | 0.11 | 0.09 | 0.07 | 0.15 |
| Variable O&M (¢/kWh) | NA | 3.66 | 2.62 | 1.72 | 0.96 | 5.79 |
| Feedstock O&M (¢/kWh) | NA | 0.03 | 0.02 | 0.01 | 0.01 | 0.06 |
| Total (¢/kWh) | NA | 6.92 | 5.32 | 3.64 | 2.31 | 12.54 |
| | | | | | | |
| $CO_2$ Mitigation Cost ($/ton) | NA | 81 | 88 | 91 | 103 | 134 |
| $CO_2$ Mitigation Cost ($/tonne) | NA | 89 | 96 | 100 | 113 | 148 |
| $CO_2$ Capture Cost ($/ton) | NA | 54 | 58 | 61 | 70 | 76 |
| $CO_2$ Capture Cost ($/tonne) | NA | 59 | 64 | 67 | 77 | 83 |

Note: Make-up Power Cost (MUPC) applied to this study is already levelized over 20 years. Therefore, the annual cost represents the "levelized cost" not the "first-year cost". The reported annual MUPC is not multiplied by the variable O&M levelization factor when calculating the LCOE. The $CO_2$ By-product revenue represents the "first-year cost" and is multiplied by the variable O&M levelization factor when calculating the LCOE.

**Economic Sensitivity Study:**

Additionally, economic sensitivity studies were developed for the five primary cases (each of the $CO_2$ capture options) to highlight which parameters affected the incremental LCOE and $CO_2$ mitigation cost to the greatest extents. A total of 40 economic evaluation cases are reported in Appendix III. The sensitivity analysis was designed to show the effects on incremental LCOE and $CO_2$ mitigation cost of variations in the four parameters of interest. The four parameters varied in this sensitivity study were capacity factor, total investment cost, make-up power cost (levelized), and $CO_2$ by-product selling price (levelized). Three points were calculated for each parameter as shown in Table 3-66. These sensitivity parameters were chosen since the base values used for these parameters are site specific to this project. Therefore proper use of these sensitivity results could potentially allow extrapolation to apply results to units other than just Conesville #5.

**Table 3-66: Economic Sensitivity Study Parameters**

| Parameter | Units | Base | Sensitivity Analysis | |
|---|---|---|---|---|
| Total Investment Cost (TIC) | $ | As Estimated | Base – 25% | Base +25% |
| Capacity Factor | % | 85 | 72 | 90 |
| $CO_2$ Selling Price, Levelized | $/ton | 0 | 25 | 50 |
| Make-up Power Cost, Levelized | ¢/kWh | 6.40 | 4.80 | 8.00 |

## 3.4.2 Economic Analysis Results

This section summarizes all the economic analysis results obtained from this study. Results discussed in subsections 3.4.2.1 and 3.4.2.2 were obtained while using a combination of economic assumptions given in Table 3-64 and Table 3-65. The results discussed in subsection 3.4.2.3 were obtained while using a combination of economic assumptions given in Table 3-64, Table 3-65, and Table 3-66. All these results are briefly discussed in the following subsections.

### 3.4.2.1 Economic Results for Cases 1-4 (90%-30% $CO_2$ capture)

Economic results for Cases 1-4 are shown in Table 3-67 and plotted in Figure 3-40 and Figure 3-41. The incremental LCOE is comprised of capital, fixed O&M, variable O&M, and fuel components. For the 90% $CO_2$ capture, for example, the respective LCOE values for these components are 3.10, 0.13, 3.66, and 0.03 ¢/kWh for a combined total of 6.92 ¢/kWh. The total incremental LCOE decreases almost linearly from 6.92 to 2.31 ¢/kWh as the $CO_2$ capture level decreases from 90% to 30%. The $CO_2$ mitigation cost, on the other hand, increases slightly from $89 to $113/tonne of $CO_2$ avoided, as the $CO_2$ capture level decreases from 90% to 30%, due to economy of scale effects.

**Table 3-67: Economic Results (Cases 1-4)**

| Case | Case 1 | Case 2 | Case 3 | Case 4 |
|---|---|---|---|---|
| **Power Generation** | | | | |
| Net Output (MW) | 303.3 | 333.2 | 362.9 | 392.1 |
| Capacity Factor (%) | 85% | 85% | 85% | 85% |
| Net Plant Heat Rate, HHV (Btu/kWh) | 13,984 | 12,728 | 11,686 | 10,818 |
| Net Efficiency, HHV (%) | 24.5% | 26.9% | 29.3% | 31.7% |
| Energy Penalty | 10.5% | 8.1% | 5.7% | 3.3% |
| | | | | |
| **$CO_2$ Profile** | | | | |
| $CO_2$ Captured (lb/hr) | 779,775 | 607,048 | 433,606 | 260,163 |
| $CO_2$ Captured (%) | 90% | 70% | 50% | 30% |
| | | | | |
| **Costs** | | | | |
| Total Investment Cost ($1000s) | 400,094 | 365,070 | 280,655 | 211,835 |
| Total Investment Cost ($/kW) | 1,319 | 1,095 | 773 | 540 |
| | | | | |
| Fixed O&M Costs ($1000/yr) | 2,494 | 2,284 | 2,079 | 1,869 |
| | | | | |
| Variable O&M Costs ($1000/yr) | 17,645 | 14,711 | 10,876 | 7,019 |
| | | | | |
| Levelized, MUPC ($1000/yr) | 62,194 | 47,926 | 33,768 | 19,885 |
| | | | | |
| $CO_2$ By-product Revenue ($1000/yr) | 0 | 0 | 0 | 0 |
| | | | | |
| Feedstock O&M Costs ($1000/yr) | 653 | 488 | 337 | 211 |
| Coal Cost ($1000/yr) | 0 | 0 | 0 | 0 |
| Natural Gas Cost ($1000/yr) | 653 | 488 | 337 | 211 |
| | | | | |
| **LCOE Contributions** | | | | |
| Capital Component (¢/kWh) | 3.10 | 2.57 | 1.82 | 1.27 |
| Fixed O&M (¢/kWh) | 0.13 | 0.11 | 0.09 | 0.07 |
| Variable O&M (¢/kWh) | 3.66 | 2.62 | 1.72 | 0.96 |
| Feedstock O&M (¢/kWh) | 0.03 | 0.02 | 0.01 | 0.01 |
| Total (¢/kWh) | 6.92 | 5.32 | 3.64 | 2.31 |
| | | | | |
| $CO_2$ Mitigation Cost ($/ton) | 81 | 88 | 91 | 103 |
| $CO_2$ Mitigation Cost ($/tonne) | 89 | 96 | 100 | 113 |
| $CO_2$ Capture Cost ($/ton) | 54 | 58 | 61 | 70 |
| $CO_2$ Capture Cost ($/tonne) | 59 | 64 | 67 | 77 |

Note: Make-up Power Cost (MUPC) applied to this study is already levelized over 20 years. Therefore, the annual cost represents the "levelized cost" not the "first-year cost". The reported annual MUPC was not multiplied by the variable O&M levelization factor when calculating the LCOE. The $CO_2$ By-product revenue represents the "first-year cost" and was multiplied by the variable O&M levelization factor when calculating the LCOE.

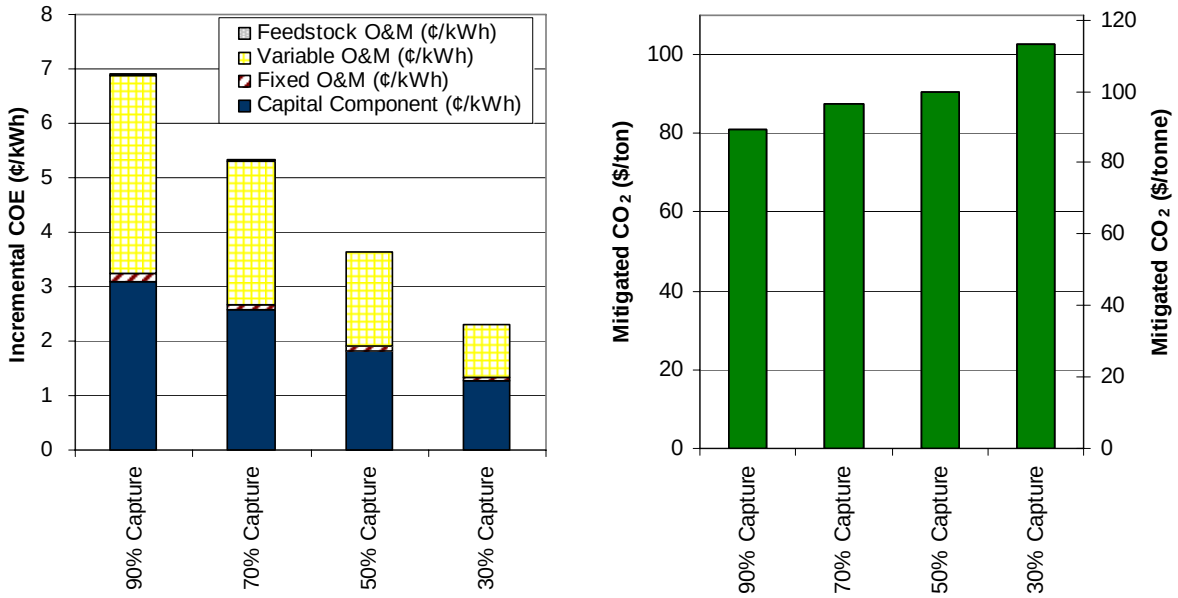


**Figure 3-40: Economic Results (Cases 1-4)**

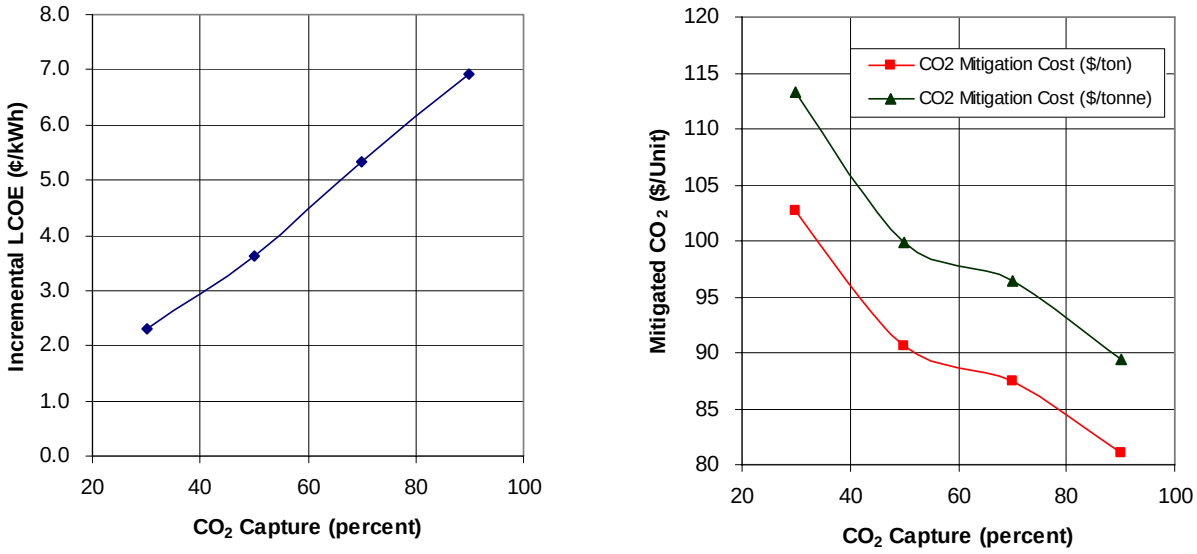


**Figure 3-41: Impact of $CO_2$ Capture Level on Incremental LCOE and $CO_2$ Mitigation Cost (Cases 1-4)**

### 3.4.2.2 Economic Results for Case 1 and Case 5 (90% and 96% $CO_2$ capture)

As stated in Section 3.3.2.5, the investment costs and O&M costs of Concept A (96% $CO_2$ Capture with MEA) from the previous study (Bozzuto et al., 2001) were updated to July 2006 dollars. The economic analysis of this case, referred to in the present study as Case 5, was then done in the same manner as Cases 1-4. Results obtained from Case 5 are compared below to those obtained from Case 1 (90% $CO_2$ capture). The rationale for this comparison is that the $CO_2$

capture percentages of both cases are close to one another, and this comparison shows the impact of using the advanced amine on economic performance parameters of merit. An equitable comparison of specific costs ($/kWe) and economics (LCOE, mitigation costs) between the advanced amine and the Kerr-McGee/ABB Lummus amine was not possible since the amine system design for the previous study was not consistent with the current designs for the advanced amine, as explained in more detail below.

Economic results for Case 1 and Case 5 are shown in Table 3-68 and Figure 3-42. The capital, fixed O&M, variable O&M, and fuel components of the incremental LCOE for Case 5 are 6.55, 0.15, 5.79, and 0.06 ¢/kWh for a total incremental LCOE value of 12.54 ¢/kWh. The corresponding values for Case 1 are 3.10, 0.13, 3.66, and 0.03 ¢/kWh for a combined total of 6.92 ¢/kWh. Extrapolating the Case 1 LCOE to 96% capture would yield an incremental COE of about 7.37 ¢/kWh. This shows an improvement of 5.17 ¢/kWh at the 96% capture level (i.e., the advanced amine vs. the Kerr-McGee/ABB Lummus amine).

The cost of electricity for Case 5 is 81% higher than that of Case 1, primarily due to its higher total investment cost ($2,786 vs. $1,319/kWe), reduced efficiency (20.3% vs. 24.5% HHV), and, to a lesser extent, higher $CO_2$ capture (96% vs. 90%). Consistent with incremental LCOE results, the $CO_2$ mitigation cost of Case 5 is more than 66% higher than that of Case 1 ($148 vs. $89/tonne).

It should be noted that the design of Case 5 (See Bozzuto et al., 2001) is not totally consistent with the design of Case 1 done in this study. Case 1 uses 2 absorbers, 2 strippers, and 2 compression trains. Case 5, which was designed in 2000, used 5 absorbers, 9 strippers, and 7 compression trains. Because of these differences, Case 1 is able to take advantage of economy of scale effects for equipment cost due to the larger equipment sizes. Additionally, Case 5 equipment was all located about 457 m (1,500 ft) from the Unit #5 stack, which also increased the costs of Case 5 relative to Case 1. It should be pointed out that if Case 5 (~96% recovery) was designed as a part of the current study, it would likely have equipment selections similar to Case 1 (i.e., a two-train system) and therefore significant cost reductions and improved economics would result.

Because of these significant design differences, an equitable comparison of specific costs ($/kWe) and economics (LCOE, mitigation costs) between the advanced amine and the Kerr-McGee/ABB Lummus amine was not possible. The results presented in Table 3-68 and Figure 3-42 must be viewed with the above context.

**Table 3-68: Economic Results for Cases 1 and 5**

| Case | Case 1 | Case 5 |
|---|---|---|
| **Power Generation** | | |
| Net Output (MW) | 303.3 | 251.6 |
| Capacity Factor (%) | 85% | 85% |
| Net Plant Heat Rate, HHV (Btu/kWh) | 13,984 | 16,856 |
| Net Efficiency, HHV (%) | 24.5% | 20.3% |
| Energy Penalty | 10.5% | 14.7% |
| | | |
| **$CO_2$ Profile** | | |
| $CO_2$ Captured (lb/hr) | 779,775 | 835,053 |
| $CO_2$ Captured (%) | 90.0% | 96.0% |
| | | |
| **Costs** | | |
| Total Investment Cost ($1000s) | 400,094 | 701,057 |
| Total Investment Cost ($/kW) | 1,319 | 2,786 |
| | | |
| Fixed O&M Costs ($1000/yr) | 2,494 | 2,488 |
| | | |
| Variable O&M Costs ($1000/yr) | 17,645 | 18,640 |
| | | |
| Levelized Make-up Power Cost ($1000/yr) | 62,194 | 86,832 |
| | | |
| $CO_2$ By-product Revenue ($1000/yr) | 0 | 0 |
| | | |
| Feedstock O&M Costs ($1000/yr) | 653 | 890 |
| Coal Cost ($1000/yr) | 0 | 0 |
| Natural Gas Cost ($1000/yr) | 653 | 890 |
| | | |
| **LCOE Contributions** | | |
| Capital Component (¢/kWh) | 3.10 | 6.55 |
| Fixed O&M (¢/kWh) | 0.13 | 0.15 |
| Variable O&M (¢/kWh) | 3.66 | 5.79 |
| Feedstock O&M (¢/kWh) | 0.03 | 0.06 |
| Total (¢/kWh) | 6.92 | 12.54 |
| | | |
| $CO_2$ Mitigation Cost ($/ton) | 81 | 134 |
| $CO_2$ Mitigation Cost ($/tonne) | 89 | 148 |
| $CO_2$ Capture Cost ($/ton) | 54 | 76 |
| $CO_2$ Capture Cost ($/tonne) | 59 | 83 |

Note: Make-up Power Cost (MUPC) applied to this study is already levelized over 20 years. Therefore, the annual cost represents the "levelized cost" not the "first-year cost". The reported annual MUPC was not multiplied by the variable O&M levelization factor when calculating the LCOE. The $CO_2$ by-product revenue represents the "first-year cost" and was multiplied by the variable O&M levelization factor when calculating the LCOE.

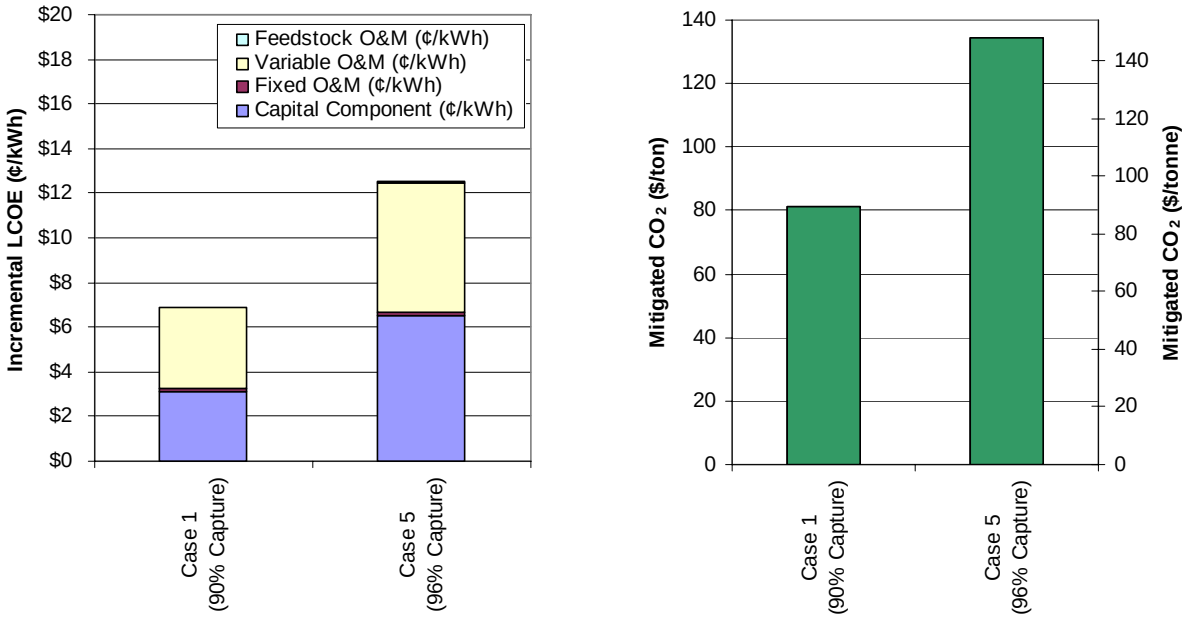


**Figure 3-42: Economic Results for Case 1 and Case 5**

### 3.4.2.3 Economic Sensitivity Analysis Results

The economic sensitivity analysis was done by varying a number of parameters (Capacity Factor, Total Investment Cost, Make-up Power Cost, and $CO_2$ By-product Selling Price) that affect the economic results. These sensitivity parameters were chosen since the base values used for these parameters are site specific to this project. Therefore, proper use of these sensitivity results could potentially allow extrapolation to apply results to units other than just Conesville #5. The objective of this analysis was to determine the relative impacts of the sensitivity parameters and $CO_2$ capture level on incremental cost of electricity and $CO_2$ mitigation cost.

Results obtained from Cases 1, 2, 3, 4, and 5 (with 90%, 70%, 50%, 30%, and 96% $CO_2$ capture, respectively) are presented in tabular and graphical forms in **Appendix III.** The economic sensitivity results obtained from Case 1 (90% $CO_2$ capture) are briefly discussed below. Detailed economic results for Case 1 and the other cases are in Appendix III.

**Economic Sensitivity Analysis Results for Case 1 (90% $CO_2$ Capture)**

Results for the Case 1 sensitivity study are shown in Figure 3-43. This figure shows the sensitivity of incremental LCOE to capacity factor, total investment cost, make-up power cost, and $CO_2$ by-product selling price. The base parameter values represent the point in Figure 3-43 where all the sensitivity curves intersect (point 0.0, 0.0). The incremental LCOE ranges from a low of -0.50 ¢/kWh to a high of 7.96 ¢/kWh for the Case 1 sensitivity analysis. The order of sensitivity (most sensitive to least sensitive) of these parameters to incremental LCOE is: $CO_2$ by-product selling price (levelized) > capacity factor > total investment cost > make-up power cost (levelized). For Cases 2 thru 5, the total investment cost becomes more significant than the make-up power cost, but, they are approximately equivalent in Case 1.

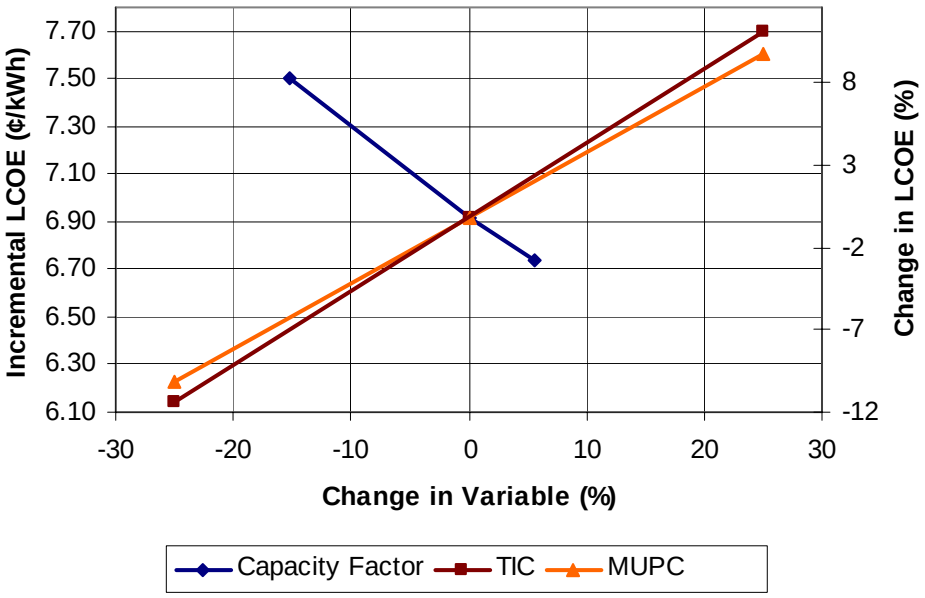


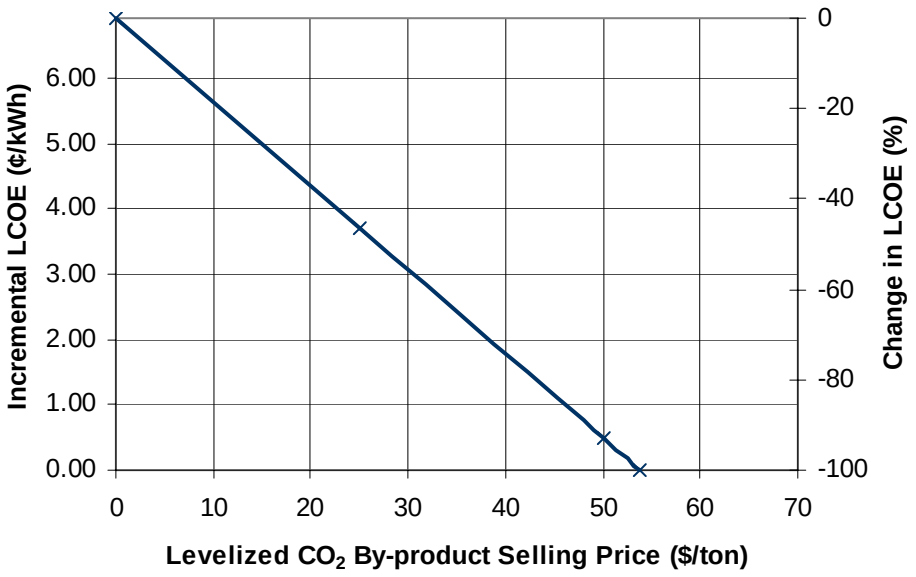


**Figure 3-43: Economic Sensitivity Results (Case 1 - 90% $CO_2$ Capture)**

# 4 ADVANCES IN POST COMBUSTION $CO_2$ CAPTURE TECHNOLOGIES

Numerous major research and developmental efforts are continually ongoing inside and outside the U.S. to further advance post-combustion $CO_2$ capture technologies. Such efforts seek to develop advanced/breakthrough technologies aimed at improving performance and cost, with the ultimate goal of developing cost-competitive post-combustion $CO_2$ capture technologies. A selected number of these technologies are listed in Table 4-1.

As can be seen, these technologies are at various stages of development, ranging from laboratory-scale to commercial-scale. More detailed information can be found on these technologies through the websites/references given in the table.

**Table 4-1: List of Selected Advanced Post-Combustion $CO_2$ Capture Technologies**

| Technology | R & D by | Status | Information Source |
|---|---|---|---|
| Aqueous Ammonia | Powerspan, In-house NETL | Pilot-plant | DOE NETL Carbon Sequestration Technology Roadmap and Program Plan 2006 (www.netl.gov) |
| Amine-Enhanced Sorbents | In-house NETL | Laboratory scale | $CO_2$ Capture Systems Using Amine Enhanced Sorbents, Coal-Gen 2006, Cincinnati, OH; (www.netl.gov) |
| Ionic Liquids | University of Notre Dame; Sachem; Merck | Laboratory scale | DOE NETL Carbon Sequestration Technology Roadmap and Program Plan 2006 (www.netl.gov) |
| Enzymatic $CO_2$ Sorbents | Carbozyme $CO_2$ | Laboratory scale | DOE NETL Carbon Sequestration Technology Roadmap and Program Plan 2006 (www.netl.gov) |
| Dry Regenerable Sorbents | Research Triangle Institute | Laboratory scale, Pilot scale | DOE Website: www.netl.gov |
| Chilled Ammonia | Alstom | Pilot scale (5-MWth) | http://www.power.alstom.com |
| KS® Solvents (KS 1, KS2, KS3) | Kansai Electric Power Co./ Mitsubishi Heavy Industry, Ltd. | Commercial scale on gas fired flue gas, Pilot scale on coal-fired flue gas | Japanese R&D on Large-Scale $CO_2$ Capture http://services.bepress.com/cgi/viewcontent.cgi?article=1006&context=eci/separations_technology_vi |

Selected technologies are briefly described below.

Aqueous Ammonia: This joint NETL-Powerspan development entails reacting ammonia with $CO_2$ in the flue gas to form ammonium carbonate, and subsequently heating the ammonium carbonate to release a pure $CO_2$ stream. Advantages include: (1) low theoretical heat of regeneration (286 Btu/lbm $CO_2$ vs. 825 Btu/lbm $CO_2$ for MEA); and (2) multi-pollutant control with saleable by-products (ammonium sulfate and ammonium nitrate fertilizers). One technical challenge is degradation of carbonate in the $CO_2$ absorber leading potentially to ammonia slip in the flue gas.

Amine-Enhanced Sorbents: This technology is being developed by NETL. The principle of operation of the process entails exposing a $CO_2$-rich stream to a carbon material (substrate) with

amine compounds attached unto it. The $CO_2$ absorbed on the amine sites is subsequently released upon increasing the temperature. This process has some advantages over the MEA process, e.g., higher $CO_2$ carrying capacity; lower heat capacity, as there is no water to heat. One technical challenge is that small particle diameters can cause high-pressure drops across the absorber. The sorbent regeneration energy has been estimated at 620 Btu/lbm $CO_2$, which would be a breakthrough improvement over the current state-of-the-art of about 1,600 Btu/lbm $CO_2$.

Chilled Ammonia: This process, being developed by Alstom, entails chilling the flue gas, recovering large quantities of water for recycle, and then utilizing a $CO_2$ absorber similar in design to the absorbers used in systems to reduce flue gas sulfur dioxide emissions. $CO_2$ is stripped at high pressure and compressed to a pressure suitable for use in EOR or sequestration. In laboratory tests co-sponsored by Alstom, EPRI, and others, the process has demonstrated a potential for capturing more than 90% $CO_2$ at an efficiency penalty that is much lower than other $CO_2$ capture technologies. This process is undergoing validation testing in a 5-$MW_{th}$ slipstream from a plant in Wisconsin.

KS® Solvents (KS1, KS2, and KS3): Kansai Electric Power Company (KEPCO) and Mitsubishi Heavy Industry (MHI) in Japan jointly developed these sterically hindered amines. The KS1 process has been capturing 160 tonnes/day $CO_2$ from a steam reforming flue gas at Kedah Danul Aman in Malaysia since 1999. Hokuriku Electric Power Company has operated a test plant with KS® solvents treating 50 $m^3N$/hr of flue gas from a coal-fired plant at the Toyama-Shinko power station. KEPCO and MHI report that the regeneration energy for KS® solvents is much less than that of MEA (700 vs. 900 kcal/kg-$CO_2$ or 1,260 vs. 1,620 Btu/lbm-$CO_2$).

# 5 SENSITIVITY OF PLANT PERFORMANCE AND ECONOMICS TO SOLVENT REGENERATION ENERGY

With respect to solvent regeneration energy, process simulation results showed that the advanced amine used in this study (Cases 1-4), based on present day technology, required 1,550 Btu/lbm-$CO_2$. This solvent regeneration energy was 34% less than in the prior study (2,350 Btu/lbm-$CO_2$), which was completed six years ago. Comparatively, recent values for solvent regeneration energy in the open literature are as shown in Table 5-1:

**Table 5-1: Solvent Regeneration Energy for Amine-Based $CO_2$ Capture Systems**

| Source | Kerr-McGee Lummus MEA, Bozzuto et al. 2001 | Economine FG$^{+}$, DOE/NETL, Parsons, WorleyParsons 2006 | Economine FG$^{+SM}$, IEA Report PH4/33 2004 | KS1-IEA Report PH4/33 2004 |
|---|---|---|---|---|
| Btu/lbm-$CO_2$ | 2,350 | 1,530 | 1,395 | 1,375 |

Numerous research and developmental efforts are ongoing to further advance post-combustion $CO_2$ capture technologies. These efforts seek to develop technologies that are focused on improving performance, and reducing cost with post-combustion $CO_2$ capture. One of the key parameters with post-combustion $CO_2$ capture systems that is an indicator of relative system performance is solvent regeneration energy requirement (Btu/lbm-$CO_2$). Hence, as a look to the future, a simplified sensitivity analysis for solvent regeneration energy and the resulting impacts on power plant performance (thermal efficiency) and economics (cost of electricity) was carried out.

It is understood that solvent regeneration energy represents a key variable for amine-based post-combustion $CO_2$ capture systems in terms of the impact this variable ultimately has on the most common measures of power plant performance (thermal efficiency) and economic merit (cost of electricity). Research and development in this area continues to progress and as a result, amine solvents and post-combustion capture systems are improving in performance. Future systems incorporating the improvements will have significant positive impacts on power plant performance and economics. Therefore, a sensitivity analysis showing the effect of anticipated reductions in solvent regeneration energy was performed in this study.

This sensitivity study was done at the 90% capture level only and the solvent regeneration energy levels investigated were 1,550 and 1,200 Btu/lbm-$CO_2$. These cases are referred to as **Cases 1 and 1a** respectively. The value of 1,550 Btu/lbm-$CO_2$ used in this study (Case 1) was taken as a base value and represents current technology (ca. 2006). The value of solvent regeneration energy for the sensitivity case (Case 1a) was selected, keeping in mind future technological developments/advancements. It is well known that commercial implementation of these amine-based post-combustion capture systems for power plant applications will not occur until several years in the future. This delay is due to a variety of reasons such as: these systems need to be proven at large scale, $CO_2$ sequestration technology needs to be proven, and policies need to be implemented to make utilization of these systems economical. It is also understood that solvent regeneration energy represents a key variable for amine-based post-combustion $CO_2$ capture systems in terms of the impact this variable ultimately has on the common measures of power plant performance (thermal efficiency) and economic merit (cost of electricity). Furthermore, research in this area continues, and as a result, amine solvents and post-combustion

capture systems in general are improving in performance and, therefore, power plants will incur reduced impacts on power plant performance and economics. The solvent regeneration energy level selected for Case 1a was 1,200 Btu/lbm-$CO_2$, which represents a near future goal. This solvent regeneration energy value was agreed on by NETL, RDS, and Alstom. This more advanced amine would represent an amine that would be commercially available in the near future.

This sensitivity study was completed in a very simplified manner. Process simulations, equipment design, and cost estimates for this future amine-based capture system were not developed since physical properties and other information, which are necessary for use in process design, equipment sizing, and material selection, are unknown for this future case (Case 1a). Costs for Case 1a were assumed to be the same as for Case 1. A detailed steam turbine material and energy balance was developed for Case 1a and therefore the calculated plant performance should be quite accurate for this case.

The following basic work steps were applied for this evaluation:

- Regeneration energy requirements and heat integration requirements between the Gas Processing System and the steam cycle are defined for the new case
- Alstom Steam Turbine Group (STG) calculates new steam turbine heat balance for the reduced solvent regeneration energy case
- An estimate of amine system auxiliary power changes for the reduced solvent regeneration energy case are developed
- Overall power plant performance (thermal efficiency) is calculated for the reduced solvent regeneration energy case
- Investment costs are assumed not to change for the reduced solvent regeneration energy case as compared to Case 1 (90% $CO_2$ capture case with 1,550 Btu/lbm-$CO_2$ solvent regeneration energy requirement)
- Economics (incremental COEs and $CO_2$ mitigation costs) are calculated for the reduced solvent regeneration energy case
- New tables, graphs, and a new report section are developed to discuss the results from the reduced solvent regeneration energy case

This sensitivity study therefore represents a view of the potential future capabilities for amine-based post-combustion $CO_2$ capture systems. In summary, the results obtained from this sensitivity study enabled the quantification of the performance and economic impacts on the power plant, for the 90% $CO_2$ capture level, with solvent regeneration energies of 1,550 and 1,200 Btu/lbm-$CO_2$ **(Cases 1 and 1a** respectively). Results are discussed in the following sub-sections.

## 5.1 Performance Analysis

Plant performance and $CO_2$ emissions are summarized for the existing and modified power plants in Table 5-2. Several graphs also illustrate selected results from the table plotted as a function of solvent regeneration energy. Four cases are shown in this section. The Base Case is

the “business as usual” case without $CO_2$ capture. Cases 1 and 1a are with 90% $CO_2$ capture, low level heat integration between the gas processing system and the steam cycle, and various levels of solvent regeneration energy. Comparisons between cases 1 and 1a isolate the impacts of solvent regeneration energy level. Case 5, from the earlier study (Bozzuto et al., 2001) is also shown. This case differs in that it has 96% $CO_2$ capture, a solvent regeneration energy requirement of 2,350 Btu/lbm-$CO_2$, and no heat integration between the gas processing system and the steam cycle. These four cases are listed below.

- **Base Case -** Existing power plant without $CO_2$ capture - refer to Section 2 for details.
- **Case 1 –** Existing power plant retrofit with an advanced “state of the art” amine system for 90% $CO_2$ capture (1,550 Btu/lbm-$CO_2$ solvent regeneration energy) - refer to Section 3 for details.
- **Case 1a –** Existing power plant retrofit with an advanced “near future” amine system for 90% $CO_2$ capture (1,200 Btu/lbm-$CO_2$ solvent regeneration energy).
- **Case 5 –** Existing power plant retrofit with a Lummus/Kerr-McGee MEA system (ca. 2000 design) for 90% $CO_2$ capture (2,350 Btu/lbm-$CO_2$ solvent regeneration energy) - refer to Section 3 for details.

## Table 5-2: Plant Performance and $CO_2$ Emissions vs. Solvent Regeneration Energy

| | | (units) | Base-Case Original Plant | Case 5 Concept A MEA | Case 1 Advanced MEA | Case 1a Advanced MEA |
|---|---|---|---|---|---|---|
| **Solvent Regeneration Energy** | | (Btu/lbm-$CO_2$) | 0 | 2350 | 1550 | 1200 |
| **$CO_2$ Capture** | | (percent) | 0 | 96 | 90 | 90 |
| ***Boiler Parameters*** | | | | | | |
| **Main Steam Flow** | | (lbm/hr) | 3131619 | 3131651 | 3131651 | 3131651 |
| **Reheat Steam Flow (to IP turbine)** | | (lbm/hr) | 2853607 | 2853607 | 2848739 | 2848725 |
| **Main Steam Pressure** | | (psia) | 2535 | 2535 | 2535 | 2535 |
| **Main Steam Temp** | | (Deg F) | 1000 | 1000 | 1000 | 1000 |
| **Reheat Steam Temp** | | (Deg F) | 1000 | 1000 | 1000 | 1000 |
| **Boiler Efficiency** | | (percent) | 88.13 | 88.13 | 88.13 | 88.13 |
| **Flue Gas Flow leaving Economizer** | | (lbm/hr) | 4014743 | 4014743 | 4014743 | 4014743 |
| **Flue Gas Temperature leaving Air Heater** | | (Deg F) | 311 | 311 | 311 | 311 |
| **Coal Heat Input (HHV)** | (HHV) | ($10^6$ Btu/hr) | 4228.7 | 4228.7 | 4228.7 | 4228.7 |
| | (LHV) | ($10^6$ Btu/hr) | 4037.9 | 4037.9 | 4037.9 | 4037.9 |
| ***$CO_2$ Removal Steam System Parameters*** | | | | | | |
| **$CO_2$ Removal System Steam Pressure** | | (psia) | --- | 65 | 47 | 47 |
| **$CO_2$ Removal System Steam Temp** | | (Deg F) | --- | 478 | 424 | 424 |
| **$CO_2$ Removal System Steam Extraction Flow** | | (lbm/hr) | --- | 1935690 | 1210043 | 975152 |
| **$CO_2$ Removal System Condensate Pressure (from reboilers)** | | (psia) | --- | 64.7 | 40 | 40 |
| **$CO_2$ Removal System Condensate Temperature** | | (Deg F) | --- | 292.7 | 267.3 | 267.3 |
| **$CO_2$ Removal System Heat to Cooling Tower** | | ($10^6$ Btu/hr) | | 1441.1 | 890.2 | 698.2 |
| **Natural Gas Heat Input** | (HHV)[2] | ($10^6$ Btu/hr) | 0 | 17.7 | 13.0 | 13.0 |
| [2] (For Dessicant Regeneration) | (LHV) | ($10^6$ Btu/hr) | --- | 16.0 | 11.7 | 11.7 |
| | | ($10^6$ SCF/Day) | | 0.417 | 0.312 | 0.312 |
| $CO_2$ produced from Natural Gas usage | | (lbm/hr) | | | 1492 | 1492 |
| ***Steam Cycle Parameters*** | | | | | | |
| **Total Heat Input to Steam Cycle** | | ($10^6$ Btu/hr) | 3707.4 | 3707.4 | 3707.4 | 3707.4 |
| **Heat Output to $CO_2$ Removal System Reboilers & Reclaimer** | | ($10^6$ Btu/hr) | --- | 1953.0 | 1218.1 | 980.6 |
| **Existing Condenser Pressure** | | (psia) | 1.23 | 1.23 | 1.23 | 1.23 |
| **Existing Condenser Heat Loss** | | ($10^6$ Btu/hr) | 2102.8 | 603.3 | 1260 | 1468 |
| **Existing Steam Turbine Generator Output** | | (kW) | 463478 | 269,341 | 342693 | 367859 |
| **$CO_2$ Removal System Turbine Generator Output** | | (kW) | 0 | 62,081 | 45321 | 36083 |
| **Total Turbine Generator Output** | | (kW) | 463478 | 331422 | 388014 | 403942 |
| ***Auxiliary Power Requirements*** | | | | | | |
| **Condensate Pump Power** | | (kW) | 563 | 450 | 503 | 512 |
| **Condenser Cooling Water Pump Power** | | (kW) | 5562 | 5407 | 5687 | 5730 |
| **Boiler Island Auxiliary Power (Fans & Pulverizers)** | | (kW) | 7753 | 7753 | 7753 | 7753 |
| **Coal & Ash Handling System** | | (kW) | 1020 | 1020 | 1020 | 1020 |
| **FGD & ESP System Auxiliary Power** | | (kW) | 8157 | 8157 | 8157 | 8157 |
| **Misc. Auxiliary Power (Lighting, HVAC, Trans, etc)** | | (kW) | 6645 | 6645 | 6645 | 6645 |
| **Air Separation Unit Power Requirement (Case B)**<br>**$CO_2$ Removal System Auxiliary Power** | | (kW) | 0 | 50355 | 54939 | 54845 |
| **Total Auxiliary Power** | | (kW) | 29700 | 79788 | 84704 | 84662 |
| fraction of gross output | | (fraction) | 0.064 | 0.241 | 0.218 | 0.210 |
| | | | 433.8 | 251.6 | 303.3 | 319.3 |
| ***Plant Performance Parameters*** | | | | | | |
| **Net Plant Output** | | (kW) | 433778 | 251634 | 303310 | 319280 |
| Normalized Net Plant Output (Relative to Base Case) | | (fraction) | 1.00 | 0.58 | 0.70 | 0.74 |
| **Net Plant Efficiency (HHV)** | | (fraction) | 0.3501 | 0.2022 | 0.2441 | 0.2569 |
| **Net Plant Efficiency (LHV)** | | (fraction) | 0.3666 | 0.2119 | 0.2556 | 0.2691 |
| Normalized Efficiency (HHV; Relative to Base Case) | | (fraction) | 1.00 | 0.58 | 0.70 | 0.73 |
| **Net Plant Heat Rate (HHV)** | | (Btu/kWh) | 9749 | 16875 | 13985 | 13285 |
| **Net Plant Heat Rate (LHV)** | | (Btu/kWh) | 9309 | 16110 | 13351 | 12684 |
| ***Plant $CO_2$ Emissions*** | | | | | | |
| **Carbon Dioxide Produced** | | (lbm/hr) | 866102 | 868137 | 867595 | 867595 |
| **Carbon Dioxide Recovered** | | (lbm/hr) | 0 | 835053 | 779775 | 779775 |
| **Carbon Dioxide Emissions** | | (lbm/hr) | 866102 | 33084 | 87820 | 87820 |
| **Fraction of Carbon Dioxide Recovered** | | (fraction) | 0 | 0.962 | 0.90 | 0.90 |
| **Specific Carbon Dioxide Emissions** | | (lbm/kWh) | 1.997 | 0.131 | 0.290 | 0.275 |
| Normalized Specific $CO_2$ Emissions (Relative to Base Case) | | (fraction) | 1.00 | 0.066 | 0.145 | 0.138 |
| **Avoided Carbon Dioxide Emissions (as compared to Base)** | | (lbm/kWh) | --- | 1.865 | 1.707 | 1.722 |

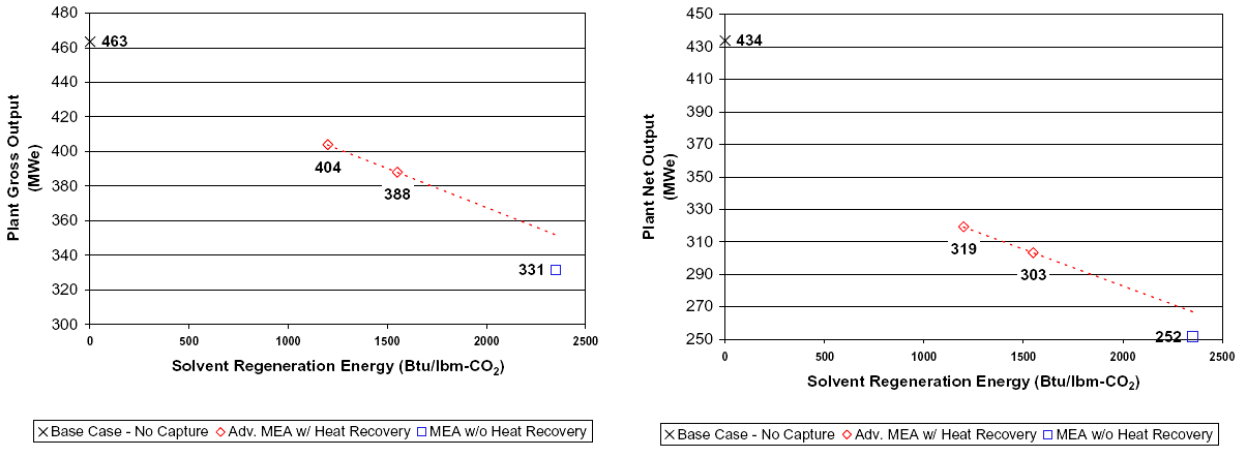


**Figure 5-1: Plant Gross and Net Output versus Solvent Regeneration Energy**

Plant output (both Gross and Net) is shown in Figure 5-1 as a function of solvent regeneration energy for the 90% capture level. Plant output is quite sensitive to changes in solvent regeneration energy. Plant net output was calculated to change by about 47 MWe (or about 1.5% relative to Case 1 - 1,550 Btu/lbm-$CO_2$) for a change in solvent regeneration energy of 1,000 Btu/lbm-$CO_2$.

Plant thermal efficiency and efficiency loss are shown in Figure 5-2. This figure shows, for the 90% capture level, the impacts on plant thermal efficiency of both solvent regeneration energy and low-level heat integration between the gas processing system and steam cycle.

Plant thermal efficiency is very sensitive to changes in solvent regeneration energy. Plant thermal efficiency was calculated to change by about 3.7 percentage points for a change in solvent regeneration energy of 1,000 Btu/lbm-$CO_2$. To help put this in perspective, Case 5 from our previous study (Bozzuto et al., 2001), which used the Kerr/McGee – ABB Lummus system, had a solvent regeneration energy of about 2,350 Btu/lbm-$CO_2$. This energy requirement was considered “state of the art” at the time of that study. In the current study, the advanced “state of the art” amine used for Cases 1-4 used a solvent regeneration energy requirement of 1,550 Btu/lbm-$CO_2$. This represents a reduction of ~800 Btu/lbm-$CO_2$ in 6 years.

Similarly, proper integration of the low level heat which is rejected in the gas processing system (compressor intercoolers, solvent stripper condenser, etc.) with the steam cycle condensate stream was calculated to add about 0.7 percentage points to plant thermal efficiency at the 1,550 Btu/lbm solvent regeneration energy level. This efficiency change would be lower for solvents with higher regeneration energy requirements (since less cool condensate leaving the main condenser of the steam cycle is available to recover the rejected heat from the gas processing system) and higher for solvents with lower regeneration energy requirements.

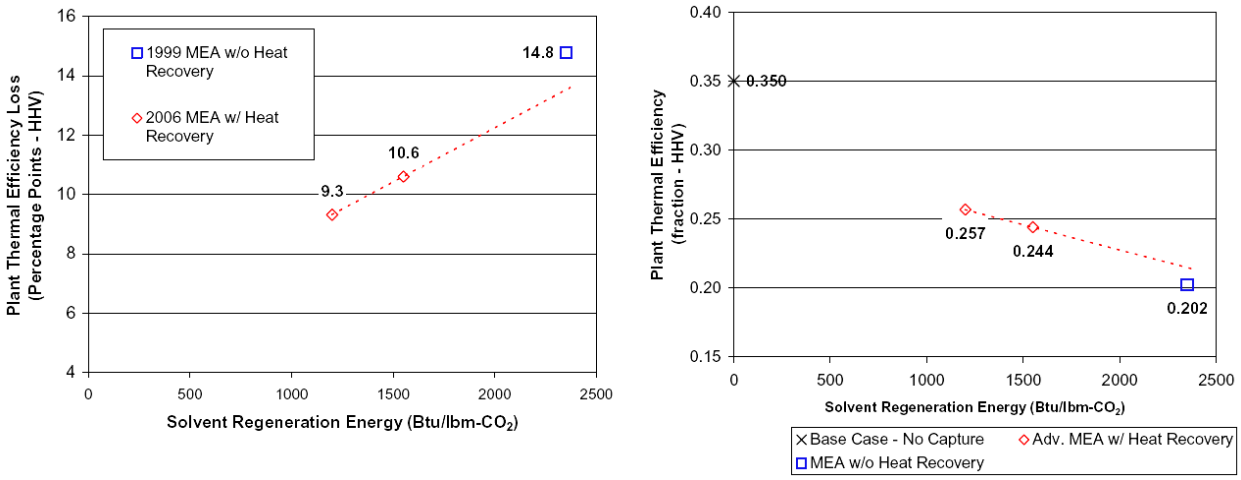


**Figure 5-2: Plant Thermal Efficiency and Efficiency Loss vs. Solvent Regeneration Energy**

Plant $CO_2$ emissions for this sensitivity study are summarized in Table 5-2 and Figure 5-3. Specific carbon dioxide emissions were reduced from 906 g/kWh (2.00 lbm/kWh) for the Base Case to between 59-132 g/kWh (0.13-0.29 lbm/kWh) depending on $CO_2$ capture level and solvent regeneration energy requirement for these cases. This corresponds to values between 6.6% and 14.5% of the Base Case specific carbon dioxide emissions.

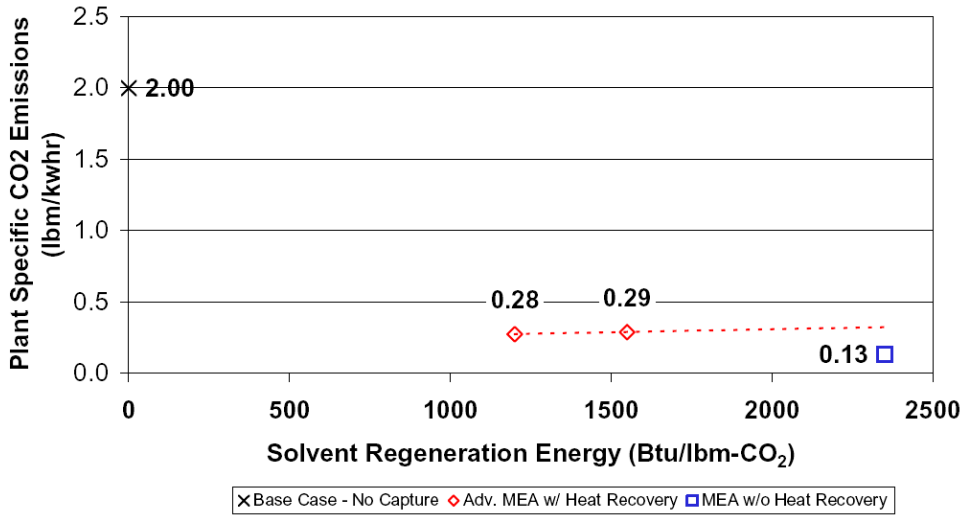


**Figure 5-3: Plant $CO_2$ Emissions vs. Solvent Regeneration Energy**

### 5.1.1 Steam Cycle Modifications and Performance with Reduced Solvent Regeneration Energy

Both Case 1 (1,550 Btu/lbm-$CO_2$ solvent regeneration energy) and Case 1a (1,200 Btu/lbm-$CO_2$ solvent regeneration energy) remove 90% of the $CO_2$ contained in the flue gas. For a discussion of the steam cycle modifications required for Case 1a to integrate the steam cycle with the amine system please refer to Section 3.1.6 where the modifications for Cases 1-5 are discussed. Figure 5-4 shows the modified steam turbine energy and material balance for Case 1a. The steam flow required to operate the reboiler/reclaimer in the amine process for Case 1a is approximately

123.0 kg/s (975.2 x $10^3$ lbm/hr), equivalent to approximately 40% of the steam that would enter the LP turbine cylinder in the absence of the amine plant. By comparison, Case1 uses 152.6 kg/s (1,210 x $10^3$ lbm/hr), equivalent to approximately 50% of the steam that would enter the LP turbine cylinder in the absence of the amine plant; Case 5 uses 244.1 kg/s (1935.7 x $10^3$ lbm/hr), equivalent to approximately 79% of the steam that would enter the LP turbine cylinder in the absence of the amine plant.

The higher steam flow entering the LP turbine for Case 1a would result in a correspondingly higher pressure at the LP turbine inlet. Consequently, the pressure drop across the pressure control valve would be reduced (less throttling) for this case, as compared to Case 1.

Heat integration for Case 1a is done in the same manner as for Case 1 (90% removal, 1,550 Btu/lbm-$CO_2$ solvent regeneration energy). Waste heat from the gas processing system ($CO_2$ compressor intercoolers, propane refrigeration unit compressor de-superheater, and solvent stripper overhead condenser) is recovered by preheating condensate from the steam cycle as is shown in the lower parts of Figure 5-4. The deaerator flow for this case is somewhat less than in Case 1, but still significantly higher than the flow indicated for the reference case (Base Case). This may impact the performance of the deaerator or require either modification of the deaerator or a change in the heat integration arrangement in order to reduce the duty of the deaerator.

In summary, for Case 1a as illustrated in Figure 5-4, the gross power output of the Conesville #5 Unit will decrease by approximately 12.8% (from 463.5 MW to 403.9 MW), when compared to the Base Case (please refer Section 2.2.4) after modification to remove 90% of the $CO_2$ contained in the flue gas with a solvent that requires 1,200 Btu/lbm solvent regeneration energy. By comparison, for Case 1, the gross power output of the Conesville #5 Unit will decrease by approximately 16.3% (from 463.5 MW to 388.0 MW), and, for Case 5, the gross power output of the Conesville #5 Unit will decrease by approximately 28.5% (from 463.5 MW to 331.4 MW), when compared to the Base Case.

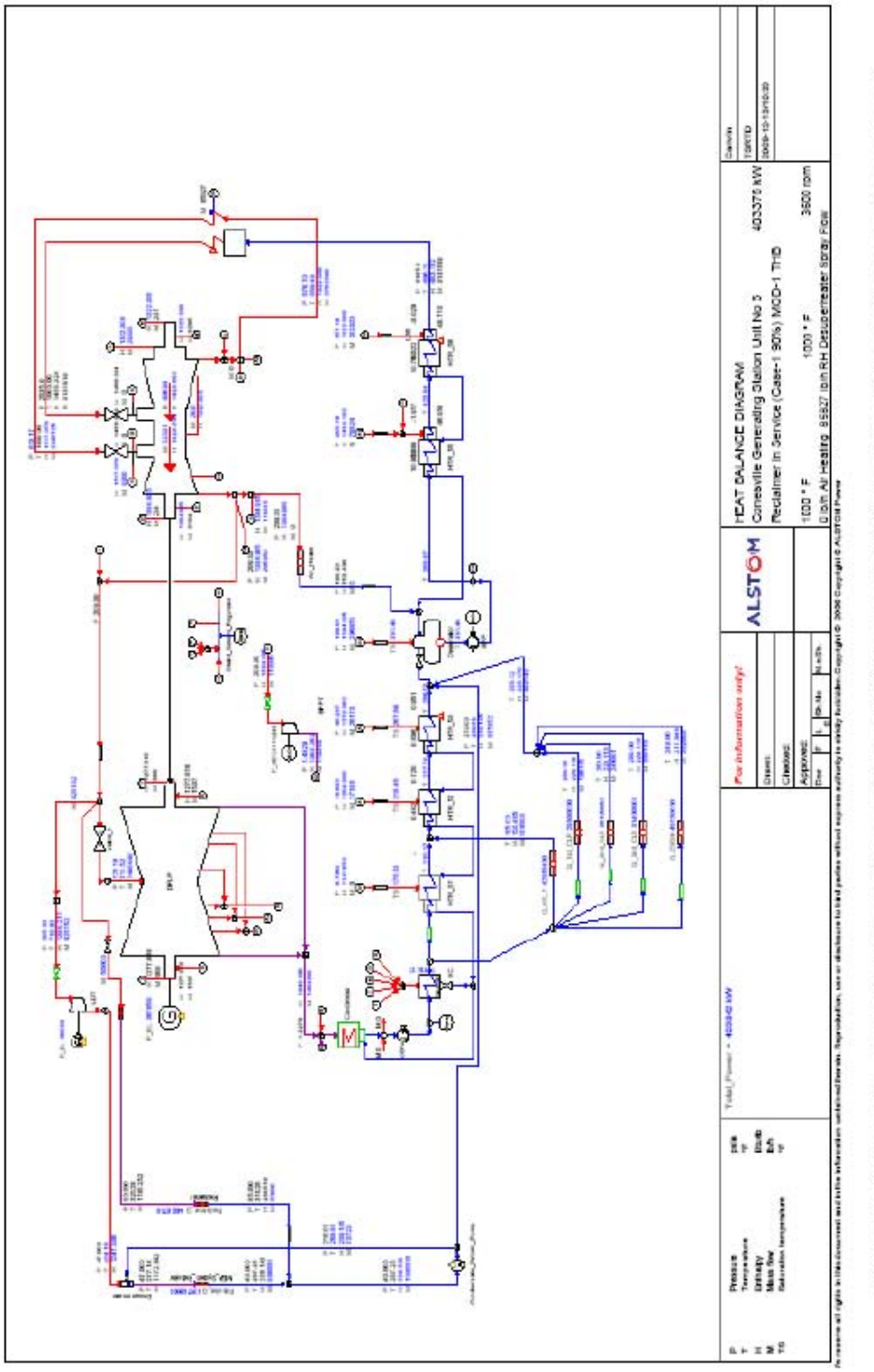


**Figure 5-4: Case 1a – Modified Water-Steam Cycle (90% Capture: 1,200 Btu/lbm Solvent Regeneration Energy)**

## 5.2 Cost Analysis

For the purposes of this sensitivity study, the investment cost for the new equipment associated with the reduced solvent regeneration energy case (Case 1a) is assumed to be the same as for Case 1 (i.e., 90% capture with 1,550 Btu/lbm solvent regeneration energy). This was done because the physical properties and other information, which is necessary for use in equipment sizing and material selection, are unknown for this future case (Case 1a). Referring to Table 3-65, shown previously, the total retrofit investment costs used for Case 1 was $400,094,000. This same value was also used for Case 1a of this sensitivity study. Specific investment costs are calculated to be 1,319 and 1,253 $/kWe-new for solvent regeneration energy values of 1,550 and 1,200 Btu/lbm-$CO_2$ respectively (Case 1 and Case 1a). The operating and maintenance costs for Case 1a are slightly lower than Case 1 due to the increase in net power.

## 5.3 Economic Analysis

Incremental LCOE breakdown and $CO_2$ mitigation costs are shown in Table 5-3 and Figure 5-5 for the two cases. Case 5 from the previous study (Bozzuto et al., 2001) is not shown in these LCOE tables or graphs because, as was discussed in Section 3.4 previously, the design and associated investment costs for Case 5 were not developed on a comparable basis to Case 1. The various components that make up the incremental LCOE (capital, fixed O&M, variable O&M, and fuel) are broken out in Table 5-3 and Figure 5-5.

**Table 5-3: Incremental Cost of Electricity Breakdown & Mitigation Costs**

| Economic Property | Case 1 (90% Capture) | Case 1a (90% Capture) |
|---|---|---|
| Capital Component (¢/kWh) | 3.10 | 2.95 |
| Fixed O&M (¢/kWh) | 0.13 | 0.14 |
| Variable O&M (¢/kWh) | 3.66 | 3.21 |
| Feedstock O&M (¢/kWh) | 0.03 | 0.03 |
| Total: | 6.92 | 6.32 |
| | | |
| Mitigated $CO_2$ ($/ton) | 81 | 73 |
| Mitigated $CO_2$ ($/tonne) | 89 | 81 |
| Captured $CO_2$ ($/ton) | 81 | 73 |
| Captured $CO_2$ ($/tonne) | 89 | 81 |

$CO_2$ mitigation cost impacts are also shown in Figure 5-5 for the two solvent regeneration energy levels all with 90% $CO_2$ capture. The mitigation costs range from about 81-89 $/tonne for these cases.

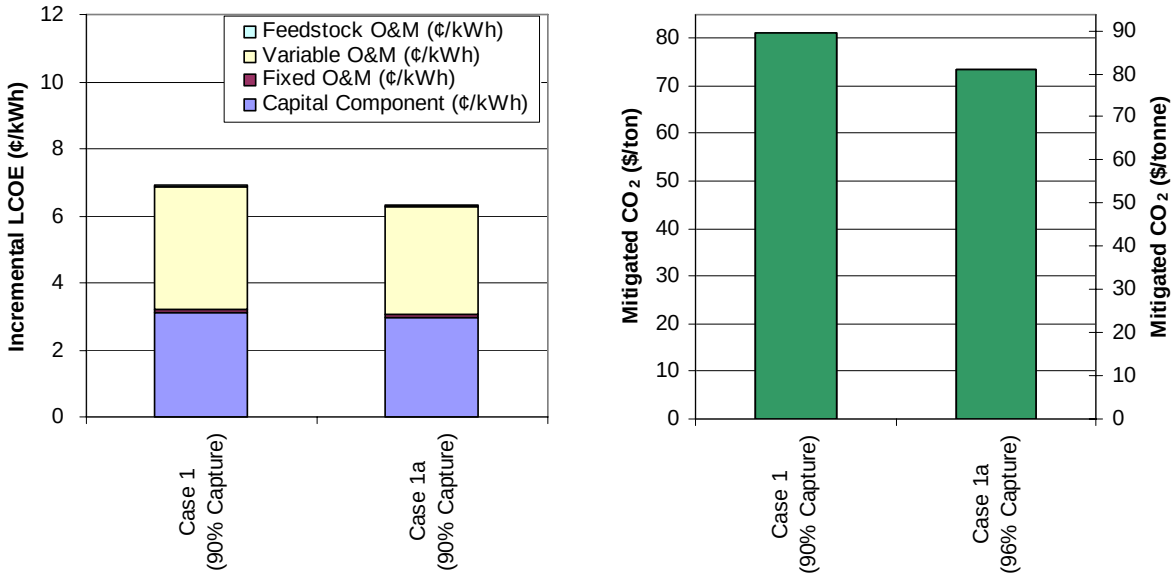


**Figure 5-5: Incremental LCOE Breakdown and $CO_2$ Mitigation Cost**

The incremental LCOE and mitigation cost results are also plotted as a function of solvent regeneration energy for these 90% capture level cases in Figure 5-6. Case 5 with 96% capture from the previous study is also shown for comparison. As shown in Figure 5-6, incremental cost of electricity is quite sensitive to changes in solvent regeneration energy. The incremental LCOE was calculated to change by about 5.41 ¢/kWh for a change in solvent regeneration energy of 1,000 Btu/lbm-$CO_2$. A similar impact (58.52 $/tonne) was calculated for mitigation cost.

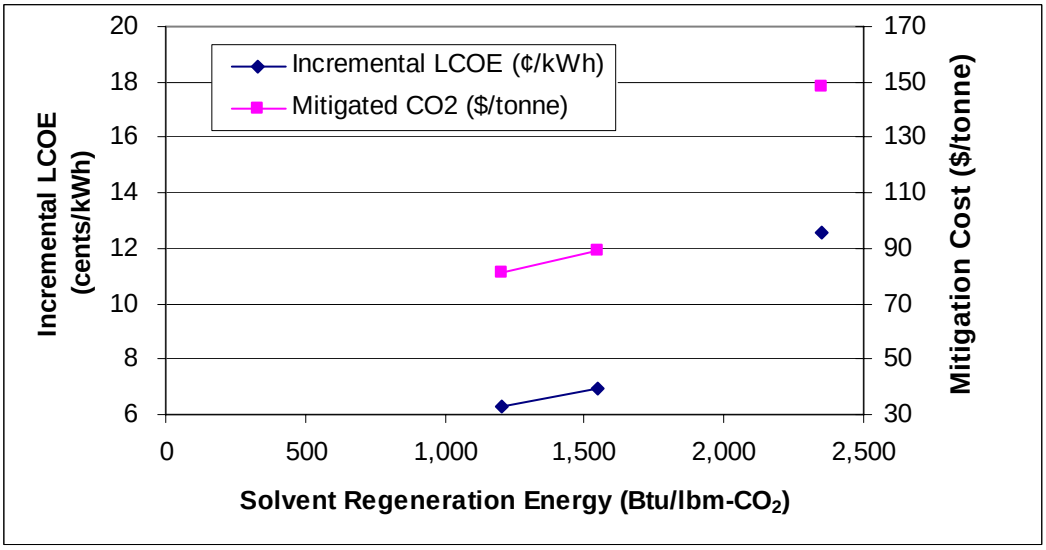


**Figure 5-6: Incremental LCOE and Mitigation Cost vs. Solvent Regeneration Energy**

# 6 REPLACEMENT POWER DISCUSSION

When $CO_2$ capture equipment is retrofit to a power generation plant, the net electrical output of the plant is reduced as a result of the parasitic power and/or heat requirements of the capture plant. To meet customer demand, it is necessary to replace this lost power. Therefore, sufficient replacement power should be provided to bring net plant electrical output back to the original level. Furthermore, in calculating avoided carbon amounts and costs, the cost and carbon emissions of the facilities providing the replacement power must be included in the calculations.

In considering replacement power options for the existing fleet, there is not one answer that fits every case. Each situation will be different. Factors that will vary from site to site include location, availability of unused land, surrounding land uses, climate, state and federal regulations, labor availability, etc. Some of the possible considerations for replacement (make-up) power are discussed below.

1. Purchase of replacement power from the grid from plants that have spare capacity. This is clearly the simplest option, but it is feasible only in the short range for a few plants. If a large number of plants tried to purchase replacement power from the grid, there would not be enough spare capacity without reducing the redundancy in the system to an unacceptable level. Another drawback is that most of this replacement power would come from coal-fired plants without carbon capture, and factoring this into the calculation would reduce the benefit of the $CO_2$ capture technology in the retrofit plant.
2. Build a new supercritical pulverized coal (SCPC) plant to provide replacement power for several $CO_2$ retrofit plants. SCPC plants have the highest efficiency (~40% based on HHV) of any PC plant. Thus, the replacement power would be generated at a higher efficiency than the retrofit unit. If the supercritical unit were not fitted with $CO_2$ capture technology, then the avoided carbon emissions of the retrofit plant would be reduced.
3. Build a natural gas combined cycle (NGCC) plant to provide replacement power. Like SCPC, NGCC has high efficiency and would replace power at a higher efficiency than the original plant being retrofit. Also, if $CO_2$ were not captured, the carbon-avoided penalty would be less, because natural gas combustion does not produce as much $CO_2$ as coal combustion. However, rising natural gas prices may hinder this option.
4. Build a nuclear plant to supply replacement power for several $CO_2$ retrofit plants. The advantage of nuclear is that the replacement power would be supplied by a plant that does not emit $CO_2$. However, under current circumstances in the U.S., it would be very difficult to get a nuclear plant built. Permitting and construction could require as long as ten years or more with attendant high costs.
5. Use some form of renewable energy as replacement power. Like nuclear, renewable energy sources do not produce any net $CO_2$ emissions. Of the various renewable options (wind, solar, tidal, geothermal, biomass, hydroelectric), wind appears to have the best prospects for providing replacement power. Solar and biomass (another form of solar) are dilute resources; tidal would require a large amount of engineering and most hydroelectric sites have either already been exploited or would engender so much opposition as to be infeasible. Wind power has the advantage that it can be implemented in small increments, so that economies of scale are not as important as with some of the

other options. Clearly, some sites would be more amenable to a nearby wind farm than other sites.

6. Use an integrated gasification combined cycle (IGCC) plant to produce replacement power. IGCC, with its combined cycle, has a thermal efficiency on par with SCPC (~40% based on HHV). However, because IGCC costs are significantly higher (20%-30%) than SCPC, the COE is also correspondingly higher. As with other fossil fuel fired technologies discussed above, if $CO_2$ is not captured, the avoided carbon emissions for the retrofit plant would be reduced.
7. Use an emerging technology to provide replacement power. Two emerging technologies that are under development are oxy-fuel combustion and chemical looping. Both these technologies are designed to produce flue gases with high $CO_2$ concentrations that can be easily purified to sequestration specifications. Neither technology is currently being used commercially, but both show promise. Since $CO_2$ capture is inherent in these technologies, they would not penalize the avoided carbon emissions of the retrofit plant.

As indicated above, which of these options is best for a particular power plant will depend on factors unique to that specific situation. In some cases, particularly with smaller or older units, it might be preferable to re-power the entire plant with SCPC, NGCC, IGCC, or some other technology rather than just retrofitting to a $CO_2$ capture plant. In this way, a higher efficiency option could be chosen, and $CO_2$ capture technology could be integrated into the design from the beginning, which is always more efficient and economic. Other factors, such as dispatching issues, could affect the entire replacement power picture.

In this study, a replacement/make-up power cost of 6.40 ¢/kWh was applied to each Case. The value reflects the levelized cost of electricity from a new subcritical pulverized bituminous coal (Greenfield) plant without carbon capture. The resulting make-up power cost was allocated to the variable O&M cost category within this study because of its dependency on the net power production and capacity factor. The MUPC of 6.40 ¢/kWh represents the lower cost perspective for a range of bituminous coal Greenfield Plant designs with and without carbon capture (i.e., ~6.33 to 11.42 ¢/kWh).

# 7 CONCLUSIONS AND RECOMMENDATIONS FOR FUTURE WORK

## Conclusions

No major technical barriers exist for retrofitting AEP's Conesville Unit #5 to capture $CO_2$ with post-combustion amine-based capture systems. Lower levels of $CO_2$ capture can be achieved by simply bypassing some of the flue gas around the $CO_2$ capture system and only processing a fraction of the total flue gas in the amine-based capture systems. Flue gas bypassing was determined to be the most cost-effective approach to obtain lower $CO_2$ recovery levels. Nominally, 4 acres of new equipment space is needed for the amine-based capture and compression system (Case 1, 90% capture level) and this equipment is located in three primary locations on the existing 200-acre power plant site, which accommodates a total of 6 power generation units. The $CO_2$ absorber equipment, which occupies about 1 acre, is located just west, adjacent to the Unit #5 FGD system. The $CO_2$ stripper equipment, which occupies about 1 acre, is located just south of the Unit #5 turbine building with the $CO_2$ compression and liquefaction system, which occupies about 2 acres, is located just south of the strippers between two banks of existing cooling towers. Slightly less acreage is needed as the capture level is reduced. If all 6 units on this site were converted to $CO_2$ capture, it may be difficult to accommodate all the new $CO_2$ capture equipment on the existing site and additional land might need to be purchased.

This report is an update of a previous study (Bozzuto et al., 2001) and it demonstrates the advancement of post-combustion amine-based capture technologies. Solvent regeneration energy was reduced by ~34%, which provided an improvement in plant thermal efficiency of 4.2 percentage points (from 20.2% to 24.4%). Additionally retrofit specific investment costs ($/kWe) were reduced by 52% and incremental COE was reduced by 45%. Demonstration of advanced low cost technologies is critical to carbon capture and sequestration (CCS) for both existing and new plants.

Energy requirements and power consumption are high, resulting in significant decreases in overall power plant efficiencies, which range from about 24.4% to 31.6% as the $CO_2$ capture level decreases from 90% to 30% for Cases 1-4, as compared to 35% for the Base Case (all HHV basis). The efficiency decrease is essentially a linear function of $CO_2$ recovery level. Specific carbon dioxide emissions were reduced from about 908 g/kWh (2 lbm/kWh) for the Base Case to 132-704 g/kWh (0.29-1.55 lbm/kWh) as the $CO_2$ recovery level decreases from 90% to 30%. Recovery of $CO_2$ ranged from 30% to 90% for the new cases (Cases 1-4) and 96% for the updated case (Case 5) of the previous study.

Specific incremental investment costs are also high, ranging from about $540 to $1,319/kWe-new, depending on $CO_2$ capture level for the current study. The specific investment cost is also nearly a linear function of $CO_2$ recovery level, although equipment selections and economy of scale effects make this relationship much less linear than efficiency is.

All cases studied indicate significant increases to the LCOE as a result of $CO_2$ capture. The incremental COE, as compared to the Base Case (air firing without $CO_2$ capture), ranges from 2.31 to 6.92 ¢/kWh (depending on $CO_2$ capture level). Similarly $CO_2$ mitigation cost increases slightly from $89 to $113/tonne of $CO_2$ avoided as the $CO_2$ capture level decreases from 90% to 30%. The roughly linear decrease in LCOE with reduced $CO_2$ capture indicates that there is no optimum $CO_2$ recovery level. Economic sensitivity studies indicate the incremental LCOE is

most impacted by the following parameters (in given order): $CO_2$ selling price, capacity factor, total investment cost, and make-up power cost.

The updated specific investment cost for Case 5/Concept A of the previous study (Bozzuto et al., 2001) was ~$2,786/kWe-new. The update of Case 5 did not include the process design or equipment selections.

The advanced amine is expected to provide significant improvement to the plant performance and economics. Use of the advanced amine in comparison to the Kerr-NMcGee/ABB Lummus amine for 90% $CO_2$ capture showed an improvement in thermal efficiency of about 3.5 percentage points, although, as pointed out above, the process design for Case 5 was not updated in this study. An equitable comparison of specific costs ($/kWe) and economics (LCOE, mitigation costs) was not possible since the amine system design for the previous study was not consistent with the current designs using the advanced amine, as explained in more detail in Section 3.4.

The commercial implementation of these amine-based post-combustion capture systems will be several years in the future and research is continually improving the performance of amine solvents and systems. A sensitivity analysis was completed that showed the effect of anticipated reductions in solvent regeneration energy (for the 90% capture level). The solvent regeneration energy cases investigated were 1,550 and 1,200 Btu/lbm-$CO_2$. Plant thermal efficiency is shown to be very sensitive to changes in solvent regeneration energy. Plant thermal efficiency was calculated to change by about 3.7 percentage points (or about 15% relative to Case 1 @ 24.5% thermal efficiency) for a change in solvent regeneration energy of 1,000 Btu/lbm-$CO_2$. Similarly, incremental LCOE is also quite sensitive to changes in solvent regeneration energy. The incremental LCOE was calculated to change by about 0.8 ¢/kWh (about 10% relative to Case 1 @ 6.92 ¢/kWh) for a change in solvent regeneration energy of 1,000 Btu/lbm-$CO_2$.

**Recommendations for Future Work**

Recommendations for future work for $CO_2$ capture from existing coal-fired utility-scale electric power plants are listed below:

- Re-do case study using best-in class-solvents. Within this context, include the use of modified steam turbine and updated process design, equipment selection, and cost to fully quantify improvements with advanced solvents
- Update the process design, equipment selections, costs, and economic analysis of the Case 5/Concept A $CO_2$ capture/compression/liquefaction system in order to fully quantify the improvements available with use of the advanced amine system
- Apply the results from best-in-class study to the existing U.S. coal fleet to determine the overall economic impacts and $CO_2$ emissions reductions, keeping in mind certain criteria:
    - Units of certain size range (large units)
    - Units of certain age group (newer units)
    - Units located near sequestration sites
    - High capacity factor units (Base Loaded)

- Because high $CO_2$ loadings in the rich amine accelerate corrosion, future studies should include methods or additives to reduce the corrosion to acceptable levels
- Demonstrate best-in-class solvents on a commercial scale
- Because high $CO_2$ loadings in the rich amine accelerate corrosion, future studies should include methods or additives to reduce the corrosion to acceptable levels

# 8 BIBLIOGRAPHY

Baily, D.W., and Feron, P., "Post-Combustion Decarbonization Process," Oil and Gas Science and Technology – Rev., IFP, Vol. 60 (2005), No. 3, pp. 461-474.

Barchas, R. and Davis, R., "The Kerr-McGee/Lummus Crest Technology for the Recovery of $CO_2$ from Stack Gases," Presented at the First International Conference on Carbon Dioxide Removal, Amsterdam, The Netherlands, March 4-6, 1992.

Bozzuto, C.R., Nsakala, N., Liljedahl, G., Palkes, M., Marion, J., Vogel, D., Fugate, M., Guha, M., "Engineering Feasibility and Economics of $CO_2$ Sequestration/Use on an Existing Coal-Fired Power Plant. Volume I: AEP's Conesville Power Plant Unit No. 5 Retrofit Study," Prepared for the Ohio Department of Development, Ohio Coal Development Office and US Department of Energy, National Energy Technology Laboratory (June 30, 2001).

Chapel, D. G., and Mariz, C. L., "Recovery of $CO_2$ from Flue Gases: Commercial Trends," Presented at the Canadian Society of Chemical Engineers Meeting, October 4-6, 1999, Saskatoon, Saskatchewan, Canada.

Chinn, D., Eimer, D., and Hurst, P., "$CO_2$ Capture Project: Post-Combustion Integrated Technology (BIT) Overview." Presented at the Third National Conference on Carbon Sequestration, National Energy Technology Laboratory, Alexandria, VA, May 3-7, 2004.

Choi, G. N., Chu, R., Degen, B., Wen, H., Richen, P. L., and Chinn, D., "Cost Effective amine Plant Design for Post Combustion $CO_2$ Capture from Power Plant Flue Gas," Presented at the Third National Conference on Carbon Sequestration, National Energy Technology Laboratory, Alexandria, VA, May 3-6, 2004.

Choi, G. N., Chu, R., Degen, B., Wen, H., Richen, P. L., and Chinn, D., "$CO_2$ Removal from Power Plant Flue Gas – Cost Efficient Design and Integration Study," Carbon Dioxide Capture for Storage in Deep Geologic Formations, Volume 1, D.C. Thomas and S. M. Benson (Eds.), ©2005 Elsevier Ltd.

Dakota Gasification Company, "Carbon Dioxide Specifications," April 2005, http://www.dakotagas.com/specs/co2spec.pdf

DOE/NETL, "2006 Cost and Performance Comparison of Fossil Energy Power Plants," Volume 1: Bituminous Coal and Natural Gas to Electricity, Draft Final, DOE/NETL – 401/053106, May 2006.

"Improvement in Power Generation with Post-Combustion Capture of $CO_2$," IEA Report Number PH4/33, November 2004.

Liljedahl, G., Marion, J., Nsakala, N., Bozzuto, C., Palkes, Vogel, D., Gupta, J.C., Guha, M., Johnson, H., and Plasynski, S., "Technical and Economic Feasibility of $CO_2$ Capture on an Existing Coal-Fired Power Plant," for Presentation at the 2001 International Joint Power Generation Conference, New Orleans, LA, June 4-7, 2001.

Marion, Jr., Nsakala, N., Bozzuto, C., Liljedahl, G., Palkes, Vogel, D., Gupta, J.C., Guha, M., Johnson, H., and Plasynski, S., "Engineering Feasibility of $CO_2$ Capture on an Existing Coal-Fried Power Plant," Presented at the 26th International Conference on Coal Utilization & Fuel Systems, Clearwater, FL, March 5-8, 2001.

"Nelson-Farrar Refinery Construction Cost Index," Oil & Gas Journal, May 1, 2006.

Palkes, M., Liljedahl, G., Nsakala, N., McDonald, M., and Gupta, J.C., “Preliminary Design of a $CO_2/O_2$ Combustion Retrofit to an Existing Coal-Fired Boiler for $CO_2$ Extraction,” Presented at Electric Power Gen ’99 Conference, Baltimore, MD, April 20-22, 1999.

Resnik, K.P., Yeh, J.T., Pennline, H.W.,“Aqua Ammonia process for Simultaneous Removal of $CO_2$, $SO_2$, and NOx,” International Journal of Environmental Technology and Management, Vol. 4, Nos. 1/2, 2004.

Rochelle, G., “Research Needs for $CO_2$ Capture from Flue Gas by Aqueous Absorption/ Stripping,” Draft of Final Report for DOE P.O. NO. DE-AF26-FT01029, University of Texas at Austin, Texas, September 2000.

Rubin, E.S., Rao, A.B., “A Technical, Economic and Environmental Assessment of Amine-based $CO_2$ Capture Technology for Power Plant Greenhouse Gas Control,” Annual Technical Progress Report, Contract No.: DE-FC26-00NT40935, October, 2002.

# 9 APPENDICES

Four appendices are included in this section, as listed below:

- Appendix I - Plant Layout Drawings
- Appendix II - Equipment Lists for the $CO_2$ recovery systems
- Appendix III - Economic Sensitivity Studies
- Appendix IV - Let Down Turbine Technical Information

## 9.1 Appendix I – Plant Drawings (Cases 1-5)

This appendix contains all layout drawings developed for this project for Cases 1-4 and Case 5/Concept A. Also included is a plot plan of the existing site without modifications for reference. The drawings provided are listed below:

**Existing Plant:**

66-530.00 Plot Plan – Existing Overall Conesville Site (before $CO_2$ unit addition)

**Cases 1-4**

15154-003 Plot Plan – Cases 1-4: Flue Gas Cooling & $CO_2$ Absorption Equipment Layout
15154-002 Plot Plan – Cases 1-4: Solvent Stripping and Compression Equipment Layout
15154-001 Plot Plan – Cases 1-4: Overall Plot Plan for Modified Conesville Unit #5

**Case 5/Concept A:**

U01-D-0208 Plot Plan – Case 5/Concept A: Flue Gas Cooling & $CO_2$ Absorption Equipment Layout
U01-D-0214 Plot Plan – Case 5/Concept A: Solvent Stripping Equipment Layout
U01-D-0204 Plot Plan – Case 5/Concept A: $CO_2$ Compression & Liquefaction Equipment Layout
U01-D-0211 Plot Plan – Case 5/Concept A: Overall Equipment Layout Conceptual Plan
U01-D-0200R Plot Plan – Case 5/Concept A: Modified Overall Site Plan

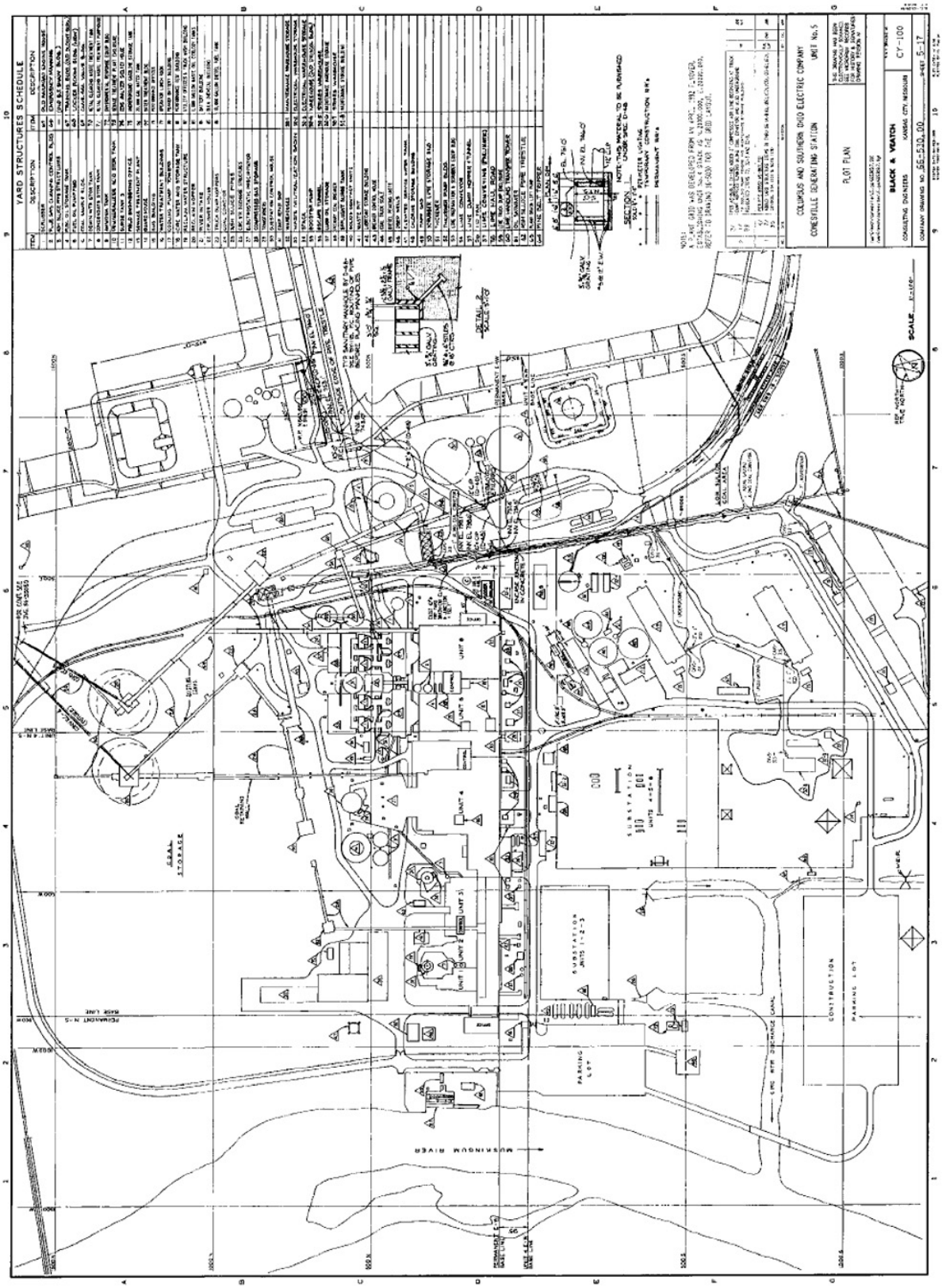


**Figure 9-1: Existing Overall Site (before $CO_2$ Unit Addition)**

**Cases 1-4**

The plant layout drawings prepared for the Cases 1-4 $CO_2$ Recovery Systems are as follows:

15154-003 Plot Plan – Cases 1: Flue Gas Cooling & $CO_2$ Absorption Equipment Layout
15154-002 Plot Plan – Cases 1: Solvent Stripping and Compression Equipment Layout
15154-001 Plot Plan – Cases 1: Overall Plot Plan for Modified Conesville Unit #5

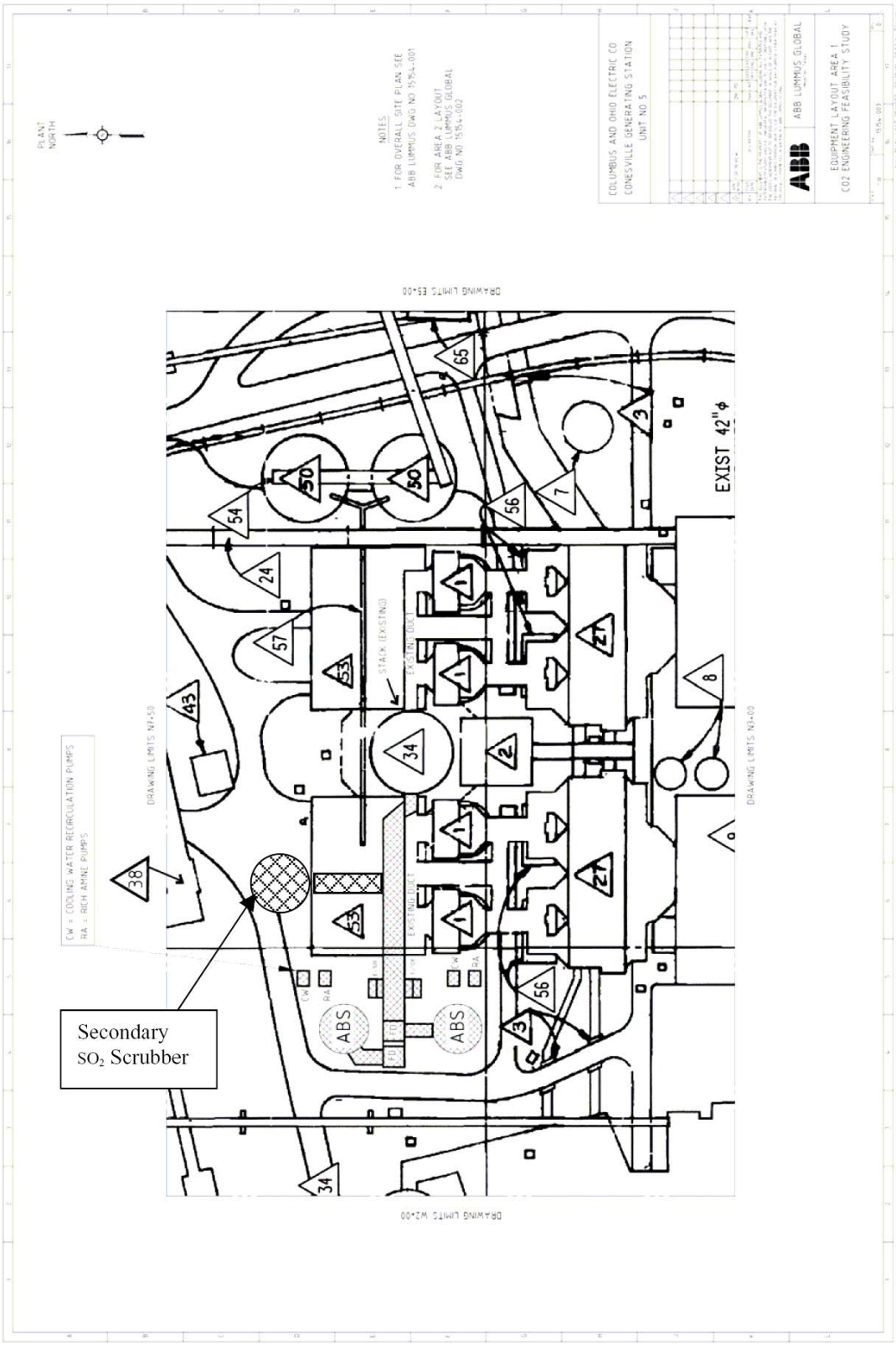


**Figure 9-2: Cases 1-4 Flue Gas Cooling & $CO_2$ Absorption Equipment Layout**

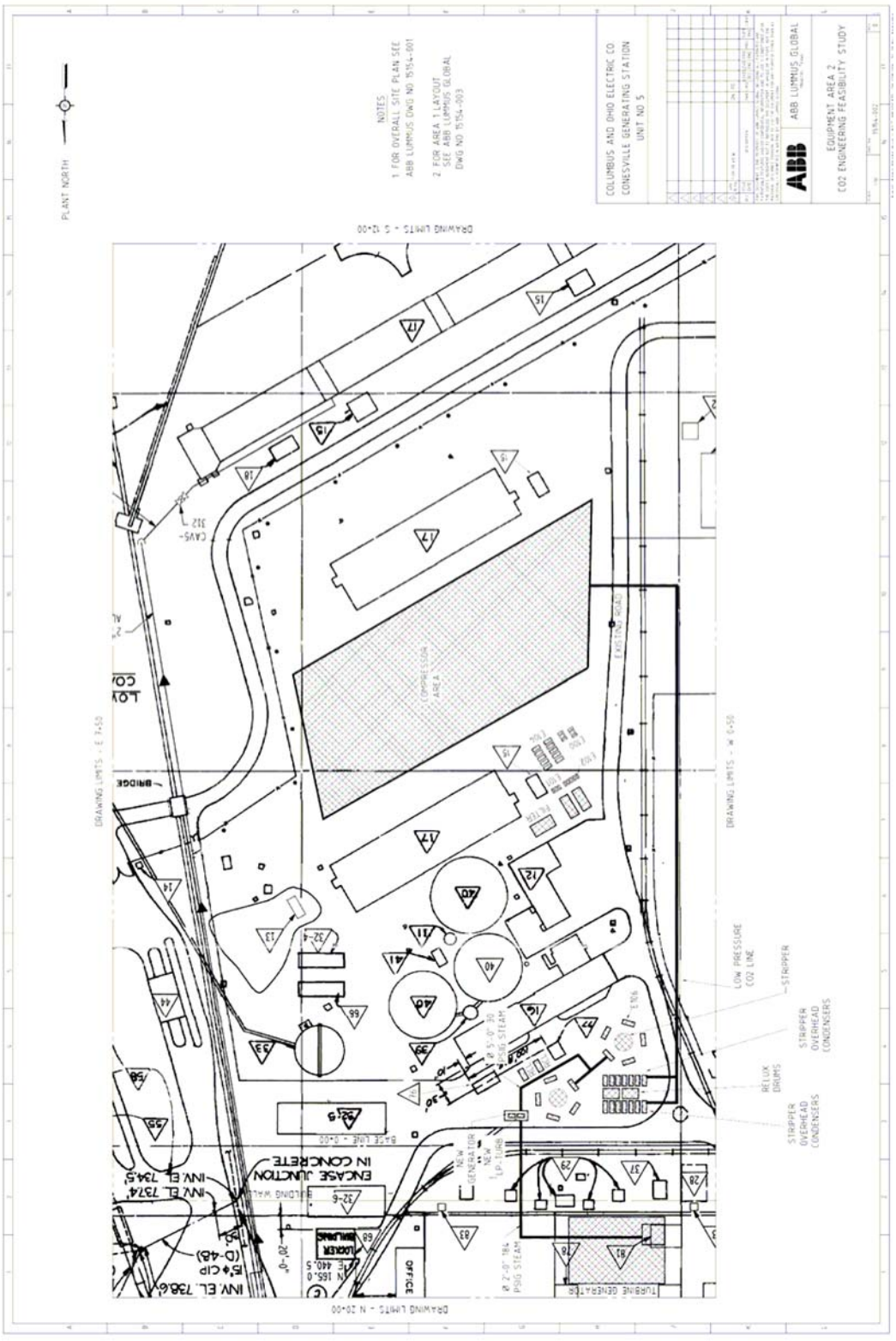


**Figure 9-3: Cases 1-4 Solvent Stripping and Compression Equipment Layout**

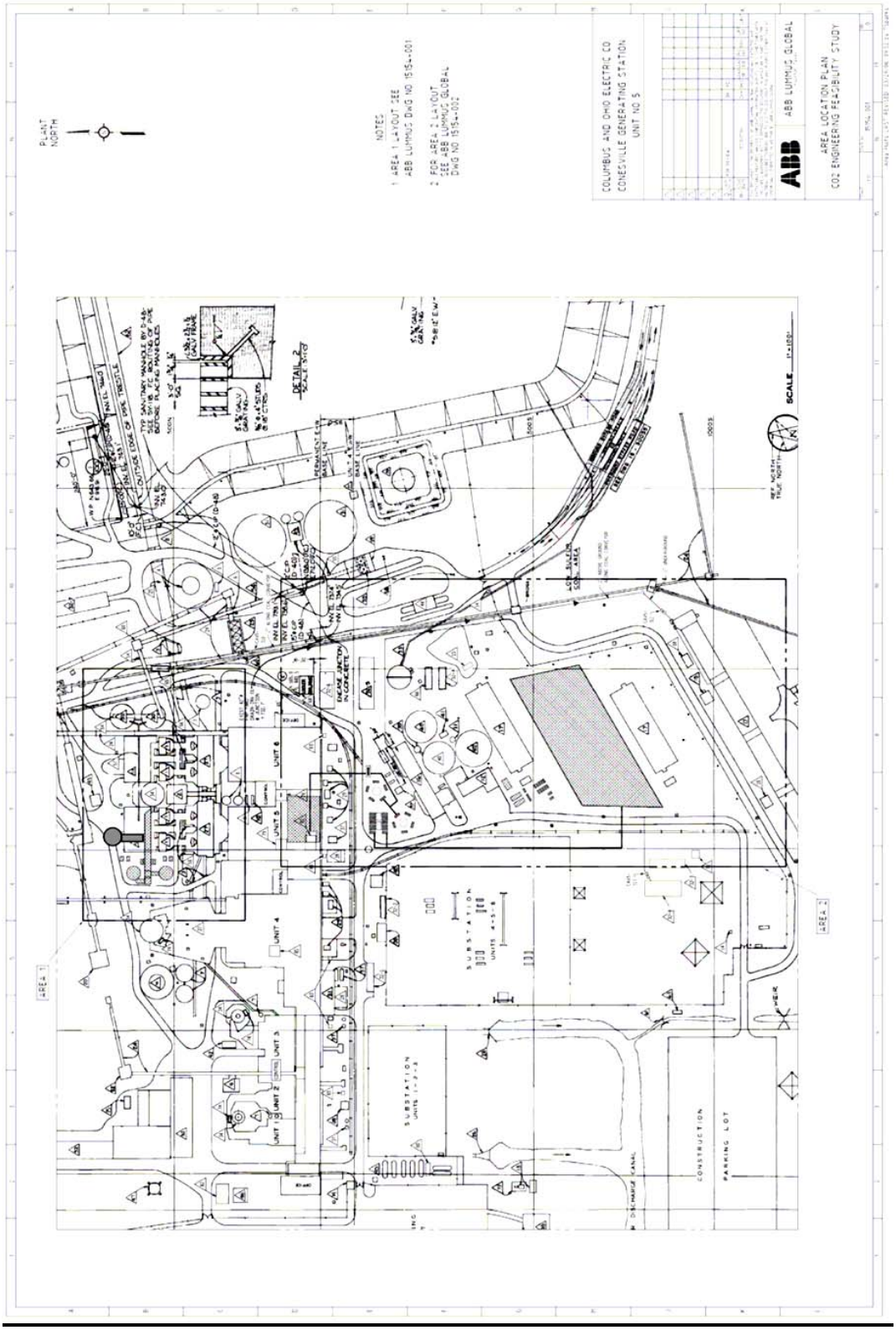


**Figure 9-4: Cases 1-4 Overall Plot Plan for Modified Conesville Unit #5**

**Case 5/Concept A:**

The plant layout drawings prepared for the Case 5/Concept A $CO_2$ Recovery System are as follows

U01-D-0208 Plot Plan – Case 5/Concept A: Flue Gas Cooling & $CO_2$ Absorption Equipment Layout
U01-D-0214 Plot Plan – Case 5/Concept A: Solvent Stripping Equipment Layout
U01-D-0204 Plot Plan – Case 5/Concept A: $CO_2$ Compression & Liquefaction Equipment Layout
U01-D-0211 Plot Plan – Case 5/Concept A: Overall Equipment Layout Conceptual Plan
U01-D-0200 Plot Plan – Case 5/Concept A: Modified Overall Site Plan

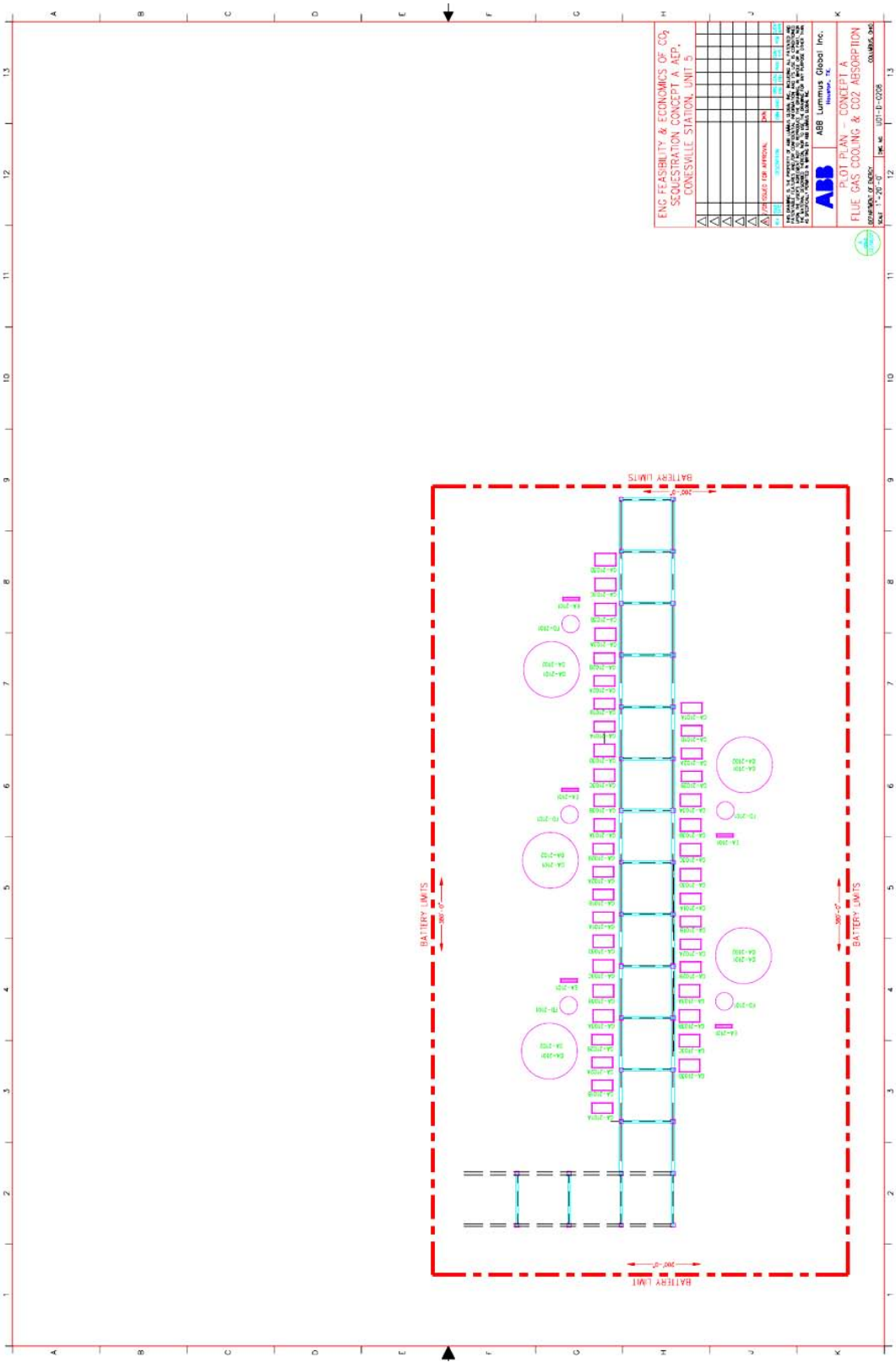


**Figure 9-5: Case 5/Concept A – Flue Gas Cooling & $CO_2$ Absorption Equipment Layout**

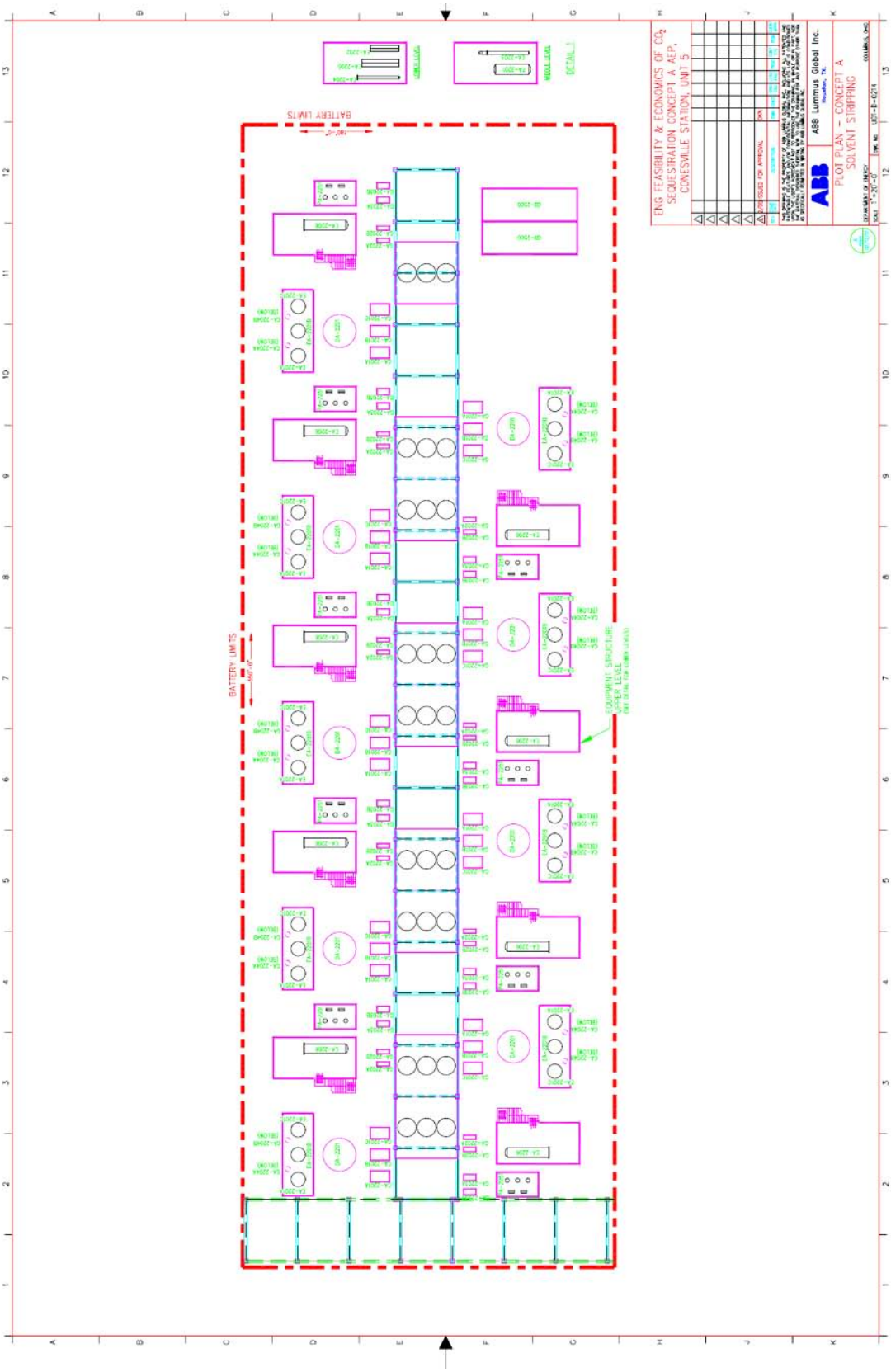


**Figure 9-6: Case 5/Concept A – Solvent Stripping Equipment Layout**

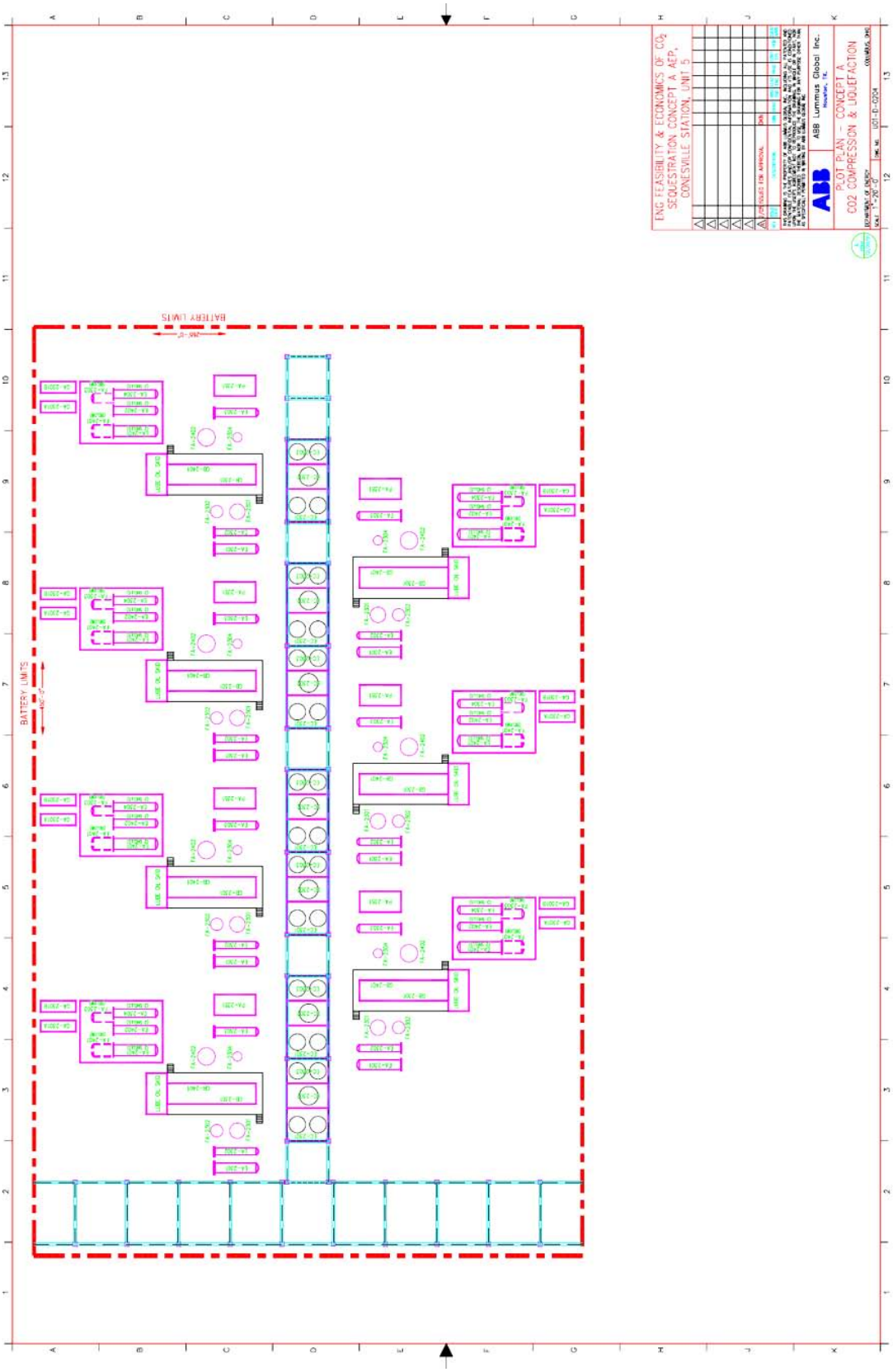


**Figure 9-7: Case 5/Concept A – $CO_2$ Compression & Liquefaction Equipment Layout**

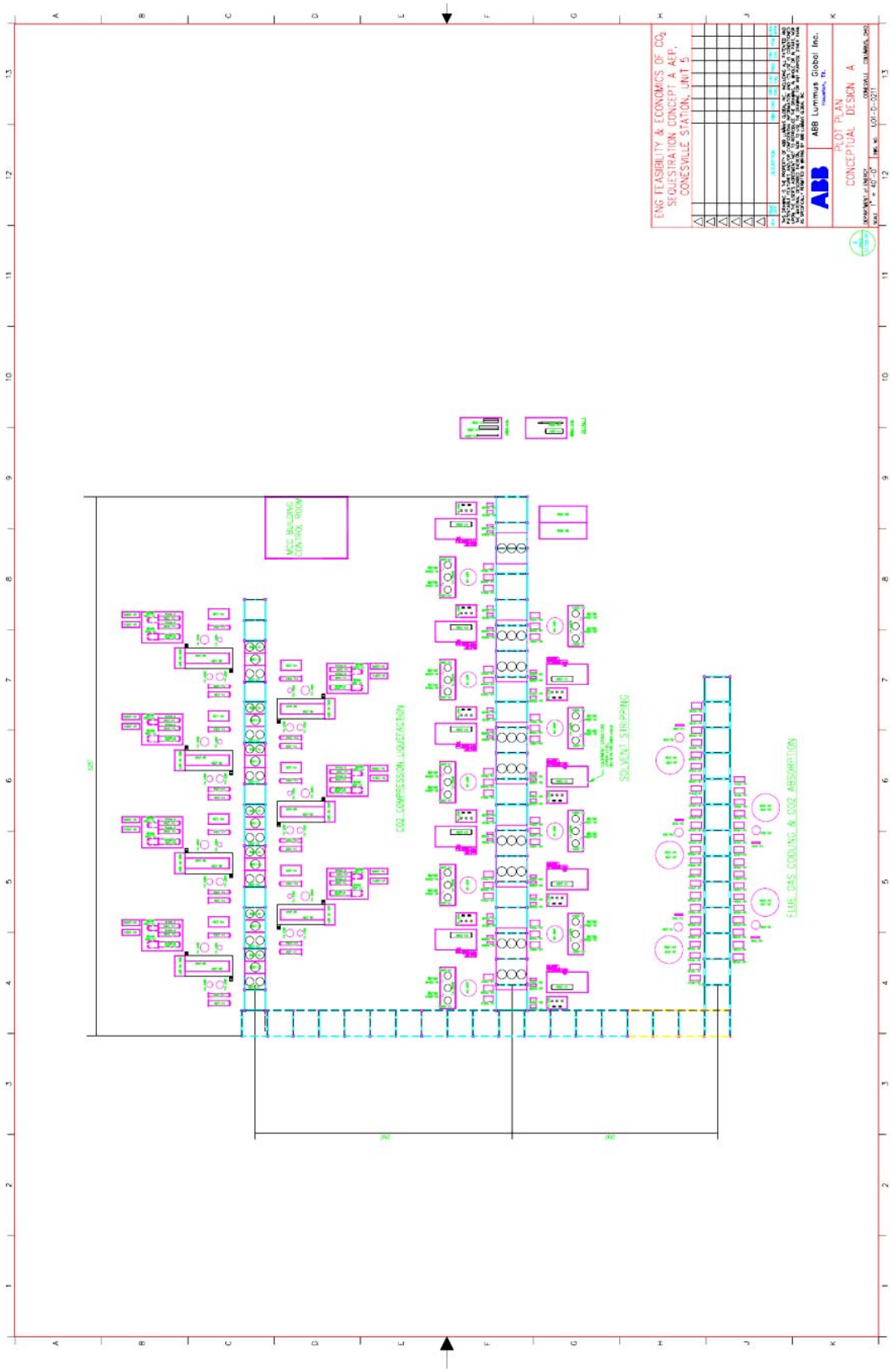


**Figure 9-8: Case 5/Concept A Overall Equipment Layout Conceptual Plan**

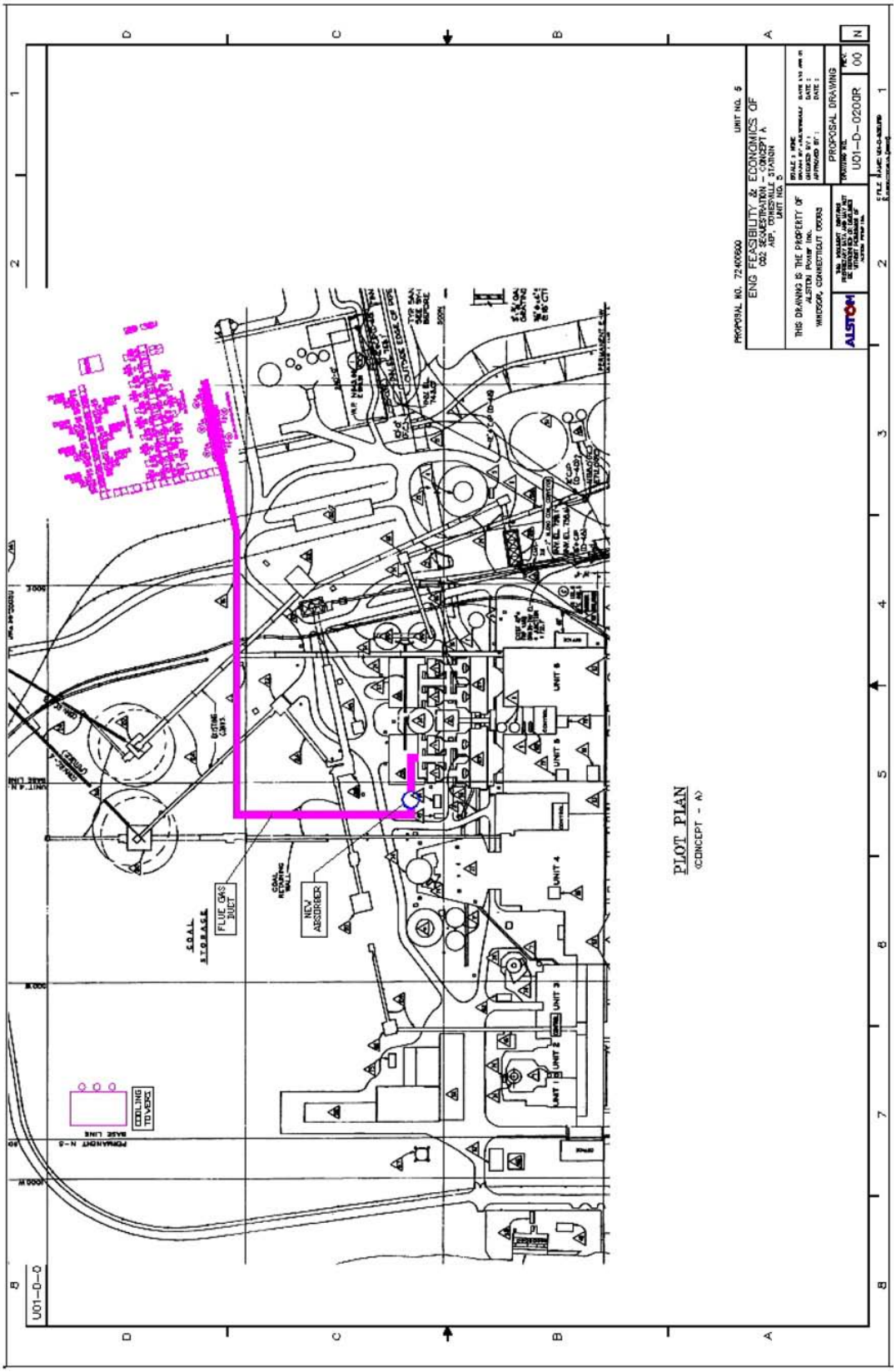


**Figure 9-9: Case 5/Concept A – Overall Plot Plan for Modified Conesville Unit #5**

## 9.2 Appendix II - Equipment Lists (Cases 1-5)

This appendix contains equipment lists for the $CO_2$ Capture Systems of all five cases (Cases 1-4 and Case 5/Concept A). Equipment data has been presented in the so-called "short spec" format, which provides adequate data for a factored cost estimate

**Table 9-1: Case 1 $CO_2$ Capture System Equipment List with Data (90% $CO_2$ Recovery)**

| No. Required | Tag no. | Description | Size Parameters | Material |
|---|---|---|---|---|
| incl w/abs | | Direct Contact Flue Gas Cooler | 34' ID x 34' S/S, DP 2.5 psig/ 0.7 psi vac | CS/SS |
| 2 | | $CO_2$ Absorber | 34' ID x 92' S/S, DP 2.5 psig/ 0.7 psi vac | CS/SS |
| 2 | | Solvent Stripper | 22' ID x 50' S/S, DP 35 psig/ FV | CS/SS |
| 10 | E-106 | Solvent Stripper Reboiler | 120 MMBTU/HR PHE, 90 psig/ 90 psig | CS/SS |
| 2 | E-109 | Solvent Stripper Reclaimer | 21 MMBTU/HR, DP S/T, 120 psig/ 190 psig | CS/TI |
| 2 | | Solvent Reclaimer Effluent Cooler | 20 MMBTU/HR, DP S/T, 150 psig/ 150 psig | CS/TI |
| 12 | E-105 | Solvent Stripper CW Condenser | 20 MMBTU/HR, DP PHE, 150 psig/ 300 psig | SS/SS |
| 4 | E-100 | Rich / Lean Solvent Exchanger | 158 MMBTU/HR, PHE , 150 psig/ 150 psig | SS316 |
| 2 | E-101 | Rich / Semi-Lean Exchanger | 119 MMBTU/HR, PHE, 150 psig/ 150 psig | SS |
| 4 | E-102 | Lean / Semi-Lean Exchanger | 61 MMBTU/HR, PHE, 150 psig/ 150 psig | SS |
| 2 | E-108 | Absorber Feed Exchanger | 117 MMBTU/HR, PHE, 150 psig/ 150 psig | SS |
| 6 | E-104 | Lean Solvent Exchanger | 59 MMBTU/HR, PHE 150 psig/ 150 psig | SS316 |
| 2 | E-111 | Propane Refrigeration De-superheater | 25 MMBTU/HR, DP S/T, 300 psig/ 100 psig | CS/CS |
| 2 | | Propane Refrigeration Condenser | 52 MMBTU/HR, DP S/T, 300 psig/ 100 psig | CS/CS |
| 2 | | Propane Refrigeration Sub-cooler | 20 MMBTU/HR, DP S/T, 300 psig/ 2500 psig | CS/LTCS |
| 2 | | $CO_2$ Compressor 1st stage Cooler | 15 MMBTU/HR, DP 75 psig | SS |
| 2 | | $CO_2$ Compressor 2nd stage Cooler | 18 MMBTU/HR, DP 125 psig | SS |
| 2 | | $CO_2$ Compressor 3rd stage Cooler | 16 MMBTU/HR, DP 235 psig | SS |
| 2 | | $CO_2$ Condenser | 66 MMBTU/HR, DP S/T, 235 psig/ 300 psig | CS/TI |
| 2 | | Solvent Stripper Reflux Drum | 8'-6" ID x 26' S/S, DP 35 psig/ FV | 304L |
| 2 | | $CO_2$ Compressor 2nd Stage Suction Drum | 11'- 6" ID x 15' S/S, DP 75 psig | CS/SS |
| 2 | | $CO_2$ Compressor 3rd Stage Suction Drum | 9' ID x 15' S/S, DP 125 psig | CS/SS |
| 2 | | Liquid $CO_2$ Surge Drum | 7' ID x 21' S/S, DP 235 psig | KCS |
| 2 | | $CO_2$ Compressor 3rd Stage Discharge KO Drum | 7' ID x 15' S/S, DP 235 psig | CS/SS |
| *2* | | Propane Refrigeration Surge Drum | 15' ID x 45'-6" S/S, DP 300 psig | CS |
| 2 | | Propane Refrigeration Suction Scrubber | 13' ID x 18' S/S, DP 300 psig | LTCS |
| 2 | | Soda Ash Day Tank | 2' ID x 4' S/S, DP atm | CS |
| 4 | | DCC Water Filter | 3532 gpm ea, DP 35 psig | SS |
| 4 | Pump-2 | Wash Water Pump | 2569 gpm ea, DP 29 psi | DI/SS |
| 4 | Pump-1 | Direct Contact Cooler Water Pump | 3532 gpm ea, DP 36 psi | SS/SS |
| 4 | P-100 | Rich Solvent Pump | 6634 gpm ea, DP 92 psi | SS/SS |
| 4 | P-102 | Lean Solvent Pump | 4870 gpm ea, DP 85 psi | SS/SS |
| 4 | P-101 | Semi-Lean Pump | 2168 gpm ea, DP 85 psi | SS/SS |
| 2 | | Solvent Stripper Reflux Pump | 212 gpm ea, DP 75 psi | DI/SS |
| 4 | | Filter Circ. Pump | 332 gpm ea, DP 91 psi | SS/SS |
| 4 | | LP Condensate Booster Pump | 650 gpm ea, DP 237 psi | CI/ SS |
| 7 | | $CO_2$ Pipeline Pump | 270 gpm ea, DP 1815 psi | CS/CS |
| 2 | | Soda Ash Metering Pump | .45 gpm ea, DP 50 psi | SS |
| 2 | | $CO_2$ Compressor (Motor driven) | 15,631 hp ea | SS wheels |
| 2 | | Propane Refrigeration Compressor | 11,661 hp ea | LTCS |
| 2 | | Corrosion Inhibitor Package | Metering, 22 lb/ hr | |
| 4 | | Solvent Filter Package | 184 gpm ea | |
| 2 | | $CO_2$ Dryer Package | 161 hp ea compressor, cooler, gas fired heater | |
| 2 | | Crane for Compressor Bldg | | |
| 2 | | Flue Gas Fans and Ducting | 3286 hp ea, SS blades | |

**Table 9-2: Case 2 $CO_2$ Capture System Equipment List with Data (70% $CO_2$ Recovery)**

| No. Required | Tag no. | Description | Size Parameters | Material |
|---|---|---|---|---|
| incl w/abs | | Direct Contact Flue Gas Cooler | 30' ID x 34' S/S, DP 2.5 psig/ 0.7 psi vac | CS/SS |
| 2 | | $CO_2$ Absorber | 30' ID x 92' S/S, DP 2.5 psig/ 0.7 psi vac | CS/SS |
| 2 | | Solvent Stripper | 19' ID x 50' S/S, DP 35 psig/ FV | CS/SS |
| 8 | E-106 | Solvent Stripper Reboiler | 120 MMBTU/HR PHE, 90 psig/ 90 psig | CS/SS |
| 2 | E-109 | Solvent Stripper Reclaimer | 17 MMBTU/HR, DP S/T, 120 psig/ 190 psig | CS/TI |
| 2 | | Solvent Reclaimer Effluent Cooler | 16 MMBTU/HR, DP S/T, 150 psig, 150 psig | CS/TI |
| 10 | E-105 | Solvent Stripper CW Condenser | 20 MMBTU/HR, DP PHE, 150 psig/ 300 psig | SS/SS |
| 4 | E-100 | Rich / Lean Solvent Exchanger | 158 MMBTU/HR, PHE , 150 psig/ 150 psig | SS316 |
| 2 | E-101 | Rich / Semi-Lean Exchanger | 119 MMBTU/HR, PHE, 150 psig/ 150 psig | SS |
| 4 | E-102 | Lean / Semi-Lean Exchanger | 61 MMBTU/HR, PHE, 150 psig/ 150 psig | SS |
| 2 | E-108 | Absorber Feed Exchanger | 91 MMBTU/HR, PHE, 150 psig/ 150 psig | SS |
| 5 | E-104 | Lean Solvent Exchanger | 59 MMBTU/HR, PHE, 150 psig/ 150 psig | SS316 |
| 2 | E-111 | Propane Refrigeration De-superheater | 19 MMBTU/HR, DP S/T, 300 psig/ 100 psig | CS/CS |
| 2 | | Propane Refrigeration Condenser | 40 MMBTU/HR, DP S/T, 300 psig/ 100 psig | CS/CS |
| 2 | | Propane Refrigeration Sub-cooler | 15 MMBTU/HR, DP S/T, 300 psig/ 2500 psig | CS/LTCS |
| 2 | | $CO_2$ Compressor 1st stage Cooler | 12 MMBTU/HR, DP 75 psig | SS |
| 2 | | $CO_2$ Compressor 2nd stage Cooler | 14 MMBTU/HR, DP 125 psig | SS |
| 2 | | $CO_2$ Compressor 3rd stage Cooler | 12 MMBTU/HR, DP 235 psig | SS |
| 2 | | $CO_2$ Condenser | 52 MMBTU/HR, DP S/T, 235 psig/ 300 psig | CS/TI |
| 2 | | Solvent Stripper Reflux Drum | 8' ID x 24' S/S, DP 35 psig/ FV | 304L |
| 2 | | $CO_2$ Compressor 2nd Stage Suction Drum | 10'- 6" ID x 14' S/S, DP 75 psig | CS/SS |
| 2 | | $CO_2$ Compressor 3rd Stage Suction Drum | 8'-6" ID x 14' S/S, DP 125 psig | CS/SS |
| 2 | | Liquid $CO_2$ Surge Drum | 6'- 6" ID x 20' S/S, DP 235 psig | KCS |
| 2 | | $CO_2$ Compressor 3rd Stage Discharge KO Drum | 6'- 6" ID x 14' S/S, DP 235 psig | CS/SS |
| 2 | | Propane Refrigeration Surge Drum | 14' ID x 42' S/S, DP 300 psig | CS |
| 2 | | Propane Refrigeration Suction Scrubber | 12' ID x 17' S/S, DP 300 psig | LTCS |
| 2 | | Soda Ash Day Tank | 2' ID x 4' S/S, DP atm | CS |
| 4 | | DCC Water Filter | 2730 gpm ea, DP 35 psig | SS |
| 4 | Pump-2 | Wash Water Pump | 1998 gpm ea, DP 29 psi | DI/SS |
| 4 | Pump-1 | Direct Contact Cooler Water Pump | 2730 gpm ea, DP 36 psi | SS/SS |
| 4 | P-100 | Rich Solvent Pump | 5160 gpm ea, DP 92 psi | SS/SS |
| 4 | P-102 | Lean Solvent Pump | 3809 gpm ea, DP 85 psi | SS/SS |
| 4 | P-101 | Semi-Lean Pump | 1663 gpm ea, DP 85 psi | SS/SS |
| 2 | | Solvent Stripper Reflux Pump | 163 gpm ea, DP 75 psi | DI/SS |
| 4 | | Filter Circ. Pump | 258 gpm ea, DP 91 psi | SS/SS |
| 4 | | LP Condensate Booster Pump | 505 gpm ea, DP 237 psi | CI/SS |
| 5 | | $CO_2$ Pipeline Pump | 293 gpm ea, DP 1815 psi | CS/CS |
| 2 | | Soda Ash Metering Pump | .45 gpm ea, DP 50 psi | SS |
| 2 | | $CO_2$ Compressor (Motor driven) | 12,143 hp ea | SS wheels |
| 2 | | Propane Refrigeration Compressor | 10,243 hp ea | LTCS |
| 2 | | Corrosion Inhibitor Package | Metering, 17 lb/ hr | |
| 4 | | Solvent Filter Package | 258 gpm ea | |
| 2 | | $CO_2$ Dryer Package | 123 hp ea compressor, cooler, gas fired heater | |
| 2 | | Crane for Compressor Bldg | | |
| 2 | | Flue Gas Fans and Ducting | 2300 hp ea, SS blades | |

**Table 9-3: Case 3 $CO_2$ Capture System Equipment List with Data (50% $CO_2$ Recovery)**

| No. Required | Tag no. | Description | Size Parameters | Material |
|---|---|---|---|---|
| incl w/abs | | Direct Contact Flue Gas Cooler | 25' ID x 34' S/S, DP 2.5 psig/ 0.7 psi vac | CS/SS |
| 2 | | $CO_2$ Absorber | 25' ID x 92' S/S, DP 2.5 psig/ 0.7 psi vac | CS/SS |
| 2 | | Solvent Stripper | 16' ID x 50' S/S, DP 35 psig/ FV | CS/SS |
| 6 | E-106 | Solvent Stripper Reboiler | 120 MMBTU/HR PHE, 90 psig/ 90 psig | CS/SS |
| 2 | E-109 | Solvent Stripper Reclaimer | 12 MMBTU/HR, DP S/T, 120 psig/ 190 psig | CS/TI |
| 2 | | Solvent Reclaimer Effluent Cooler | 11 MMBTU/HR, DP S/T, 150 psig/ 150 psig | CS/TI |
| 7 | E-105 | Solvent Stripper CW Condenser | 20 MMBTU/HR, DP PHE, 150 psig/ 300 psig | SS/SS |
| 3 | E-100 | Rich / Lean Solvent Exchanger | 158 MMBTU/HR, PHE , 150 psig/ 150 psig | SS316 |
| 2 | E-101 | Rich / Semi-Lean Exchanger | 119 MMBTU/HR, PHE, 150 psig/ 150 psig | SS |
| 3 | E-102 | Lean / Semi-Lean Exchanger | 61 MMBTU/HR, PHE, 150 psig/ 150 psig | SS |
| 2 | E-108 | Absorber Feed Exchanger | 66 MMBTU/HR, PHE, 150 psig/ 150 psig | SS |
| 4 | E-104 | Lean Solvent Exchanger | 59 MMBTU/HR, PHE 150 psig/ 150 psig | SS316 |
| 1 | E-111 | Propane Refrigeration De-superheater | 27 MMBTU/HR, DP S/T, 300 psig/ 100 psig | CS/CS |
| 1 | | Propane Refrigeration Condenser | 58 MMBTU/HR, DP S/T, 300 psig/ 100 psig | CS/CS |
| 1 | | Propane Refrigeration Sub-cooler | 22 MMBTU/HR, DP S/T, 300 psig/ 2500 psig | CS/LTCS |
| 1 | | $CO_2$ Compressor 1st stage Cooler | 16 MMBTU/HR, DP 75 psig | SS |
| 1 | | $CO_2$ Compressor 2nd stage Cooler | 20 MMBTU/HR, DP 125 psig | SS |
| 1 | | $CO_2$ Compressor 3rd stage Cooler | 17 MMBTU/HR, DP 235 psig | SS |
| 1 | | $CO_2$ Condenser | 73 MMBTU/HR DP S/T, 235 psig/ 300 psig | CS/TI |
| 2 | | Solvent Stripper Reflux Drum | 7' ID x 22' S/S, DP 35 psig/ FV | 304L |
| 1 | | $CO_2$ Compressor 2nd Stage Suction Drum | 12' ID x 16' S/S, DP 75 psig | CS/SS |
| 1 | | $CO_2$ Compressor 3rd Stage Suction Drum | 9' ID x 16' S/S, DP 125 psig | CS/SS |
| 1 | | Liquid $CO_2$ Surge Drum | 7' ID x 22' S/S, DP 235 psig | KCS |
| 1 | | $CO_2$ Compressor 3rd Stage Discharge KO Drum | 7' ID x 16' S/S, DP 235 psig | CS/SS |
| 1 | | Propane Refrigeration Surge Drum | 16' ID x 47' S/S, DP 300 psig | CS |
| 1 | | Propane Refrigeration Suction Scrubber | 13' ID x 19' S/S, DP 300 psig | LTCS |
| 2 | | Soda Ash Day Tank | 2' ID x 4' S/S, DP atm | CS |
| 4 | | DCC Water Filter | 1931 gpm ea, DP 35 psig | SS |
| 4 | Pump-2 | Wash Water Pump | 1427 gpm ea, DP 29 psi | DI/SS |
| 4 | Pump-1 | Direct Contact Cooler Water Pump | 1931 gpm ea, DP 36 psi | SS/SS |
| 4 | P-100 | Rich Solvent Pump | 3686 gpm ea, DP 92 psi | SS/SS |
| 4 | P-102 | Lean Solvent Pump | 2721 gpm ea, DP 85 psi | SS/SS |
| 4 | P-101 | Semi-Lean Pump | 1189 gpm ea, DP 85 psi | SS/SS |
| 2 | | Solvent Stripper Reflux Pump | 116 gpm ea, DP 75 psi | DI/SS |
| 4 | | Filter Circ. Pump | 184 gpm ea, DP 91 psi | SS/SS |
| 4 | | LP Condensate Booster Pump | 361 gpm ea, DP 237 psi | CI/SS |
| 4 | | $CO_2$ Pipeline Pump | 262 gpm ea, DP 1815 psi | CS/CS |
| 2 | | Soda Ash Metering Pump | .45 gpm ea, DP 50 psi | SS |
| 1 | | $CO_2$ Compressor (Motor driven) | 17,328 hp | SS wheels |
| 1 | | Propane Refrigeration Compressor | 14,618 hp | LTCS |
| 2 | | Corrosion Inhibitor Package | Metering, 12 lb/ hr | |
| 4 | | Solvent Filter Package | 184 gpm ea | |
| 1 | | $CO_2$ Dryer Package | 178 hp compressor, cooler, gas fired heater | |
| 1 | | Crane for Compressor Bldg | | |
| 2 | | Flue Gas Fans and Ducting | 1825 hp ea, SS blades | |

**Table 9-4: Case 4 $CO_2$ Capture System Equipment List with Data (30% $CO_2$ Recovery)**

| No. Required | Tag no. | Description | Size Parameters | Material |
|---|---|---|---|---|
| Incl w/abs | | Direct Contact Flue Gas Cooler | 28' ID x 34' S/S, DP 2.5 psig/ 0.7 psi vac | CS/SS |
| 1 | | $CO_2$ Absorber | 28' ID x 92' S/S, DP 2.5 psig/ 0.7 psi vac | CS/SS |
| 1 | | Solvent Stripper | 20' ID x 50' S/S, DP 35 psig/ FV | CS/SS |
| 4 | E-106 | Solvent Stripper Reboiler | 120 MMBTU/HR PHE, 90 psig/ 90 psig | CS/SS |
| 1 | E-109 | Solvent Stripper Reclaimer | 14 MMBTU/HR, DP S/T, 120 psig/ 190 psig | CS/TI |
| 1 | | Solvent Reclaimer Effluent Cooler | 13 MMBTU/HR, DP S/T, 150 psig/ 150 psig | CS/TI |
| 4 | E-105 | Solvent Stripper CW Condenser | 20 MMBTU/HR, DP PHE, 150 psig/ 300 psig | SS/SS |
| 2 | E-100 | Rich / Lean Solvent Exchanger | 158 MMBTU/HR, PHE , 150 psig/ 150 psig | SS316 |
| 1 | E-101 | Rich / Semi-Lean Exchanger | 119 MMBTU/HR, PHE, 150 psig/ 150 psig | SS |
| 1 | E-102 | Lean / Semi-Lean Exchanger | 122 MMBTU/HR, PHE, 150 psig/ 150 psig | SS |
| 1 | E-108 | Absorber Feed Exchanger | 78 MMBTU/HR, PHE, 150 psig/ 150 psig | SS |
| 2 | E-104 | Lean Solvent Exchanger | 59 MMBTU/HR, PHE 150 psig/ 150 psig | SS316 |
| 1 | E-111 | Propane Refrigeration De-superheater | 17 MMBTU/HR, DP S/T, 300 psig/ 100 psig | CS/CS |
| 1 | | Propane Refrigeration Condenser | 35 MMBTU/HR, DP S/T, 300 psig/ 100 psig | CS/CS |
| 1 | | Propane Refrigeration Sub-cooler | 13 MMBTU/HR, DP S/T, 300 psig/ 2500 psig | CS/LTCS |
| 1 | | $CO_2$ Compressor 1st stage Cooler | 10 MMBTU/HR, DP 75 psig | SS |
| 1 | | $CO_2$ Compressor 2nd stage Cooler | 12 MMBTU/HR, DP 125 psig | SS |
| 1 | | $CO_2$ Compressor 3rd stage Cooler | 11 MMBTU/HR, DP 235 psig | SS |
| 1 | | $CO_2$ Condenser | 44 MMBTU/HR DP S/T, 235 psig/ 300 psig | CS/TI |
| 1 | | Solvent Stripper Reflux Drum | 7' ID x 23' S/S, DP 35 psig/ FV | 304L |
| 1 | | $CO_2$ Compressor 2nd Stage Suction Drum | 10' ID x 13' S/S, DP 75 psig | CS/SS |
| 1 | | $CO_2$ Compressor 3rd Stage Suction Drum | 8' ID x 13' S/S, DP 125 psig | CS/SS |
| 1 | | Liquid $CO_2$ Surge Drum | 6' ID x 19' S/S, DP 235 psig | KCS |
| 1 | | $CO_2$ Compressor 3rd Stage Discharge KO Drum | 6' ID x 13' S/S, DP 235 psig | CS/SS |
| 1 | | Propane Refrigeration Surge Drum | 13' ID x 40' S/S, DP 300 psig | CS |
| 1 | | Propane Refrigeration Suction Scrubber | 11' ID x 16' S/S, DP 300 psig | LTCS |
| 1 | | Soda Ash Day Tank | 3' ID x 4' S/S, DP atm | CS |
| 2 | | DCC Water Filter | 2286 gpm ea, DP 35 psig | SS |
| 2 | Pump-2 | Wash Water Pump | 1728 gpm ea, DP 29 psi | DI/SS |
| 2 | Pump-1 | Direct Contact Cooler Water Pump | 2286 gpm ea, DP 36 psi | SS/SS |
| 2 | P-100 | Rich Solvent Pump | 4420 gpm ea, DP 92 psi | SS/SS |
| 2 | P-102 | Lean Solvent Pump | 3220 gpm ea, DP 85 psi | SS/SS |
| 2 | P-101 | Semi-Lean Pump | 1480 gpm ea, DP 85 psi | SS/SS |
| 1 | | Solvent Stripper Reflux Pump | 140 gpm, DP 75 psi | DI/SS |
| 2 | | Filter Circ. Pump | 220 gpm ea, DP 91 psi | SS/SS |
| 2 | | LP Condensate Booster Pump | 434 gpm ea, DP 237 psi | CI/SS |
| 3 | | $CO_2$ Pipeline Pump | 210 gpm ea, DP 1815 psi | CS/CS |
| 1 | | Soda Ash Metering Pump | .45 gpm, DP 50 psi | SS |
| 1 | | $CO_2$ Compressor (Motor driven) | 10,419 hp | SS wheels |
| 1 | | Propane Refrigeration Compressor | 8,788 hp | LTCS |
| 1 | | Corrosion Inhibitor Package | Metering, 14 lb/ hr | |
| 1 | | Solvent Filter Package | 1870 gpm | |
| 1 | | $CO_2$ Dryer Package | 108 hp compressor, cooler, gas fired heater | |
| 1 | | Crane for Compressor Bldg | | |
| 1 | | Flue Gas Fan and Ducting | 2190 hp, SS blades | |

**Table 9-5: Case 5/Concept A $CO_2$ Capture System Equipment List with Data (96% $CO_2$ Recovery)**

| No. Required | Tag no. | Description | Size Parameters | Material |
|---|---|---|---|---|
| 5 | DA-2101 | Direct Contact Flue Gas Cooler | 27' ID x 34' S/S, DP 2.5 psig/ 0.7 psi vac | CS/SS |
| 5 | DA-2102 | $CO_2$ Absorber | 27' ID x 92' S/S, DP 2.5 psig/ 0.7 psi vac | CS/SS |
| 9 | DA-2201 | Solvent Stripper | 16' ID x 100' S/S, DP 35 psig/ FV | CS/SS |
| 9 | EA-2201 | Solvent Stripper Reboiler | 217 MMBTU/HR, DP S/T, 50 psig/ 60 psig | CS/SS |
| 9 | EA-2203 | Solvent Stripper Reclaimer | 5.6 MMBTU/HR, DP S/T, 120 psig/ 190 psig | CS/TI |
| 9 | EA-2204 | Solvent Reclaimer Effluent Cooler | 5 MMBTU/HR, DP S/T, 125 psig/ 100 psig | CS/TI |
| 9 | EA-2206 | Solvent Stripper CW Condenser | 41.6 MMBTU/HR, DP S/T, 35 psig/ 100 psig | SS/TI |
| 7 | EA-2301 | $CO_2$ Compressor 1st Stage Aftercooler | 1.9 MMBTU/HR, DP S/T, 75 psig/ 100 psig | SS/TI |
| 7 | EA-2302 | $CO_2$ Compressor 2nd Stage Aftercooler | 1.3 MMBTU/HR, DP S/T, 125 psig/ 100 psig | SS/TI |
| 7 | EA-2303 | $CO_2$ Compressor 3rd Stage Aftercooler | 1 MMBTU/HR, DP S/T, 235 psig/ 100 psig | CS/TI |
| 7 | EA-2304 | $CO_2$ Condenser | 19 MMBTU/HR, DP S/T, 235 psig/ 300 psig | CS/TI |
| 5 | EA-2101 | Direct Contact Flue Gas Water Cooler | 4.8 MMBTU/HR, DP P/U, 50 psig/ 100 psig | TI |
| 9 | EA-2205 | Rich / Lean Solvent Exchanger | 210 MMBTU/HR, DP P/P, 135 psig/ 155 psig | SS316 |
| 9 | EA-2202 | Lean Solvent Cooler | 101.8 MMBTU/HR, DP P/U, 135 psig/ 100 psig | TI |
| 7 | EA-2401 | Propane Refrigeration Condenser | 20.45 MMBTU/HR, DP S/T, 300 psig/ 100 psig | CS/CS |
| 7 | EA-2402 | Propane Refrigeration Sub-cooler | 5.9 MMBTU/HR, DP S/T, 300 psig/ 2500 psig | CS/LTCS |
| 7 | EC-2301 | $CO_2$ Compressor 1st Stage Air Cooler | 2.94 MMBTU/HR, DP 75 psig | SS |
| 7 | EC-2302 | $CO_2$ Compressor 2nd Stage Air Cooler | 3.1 MMBTU/HR, DP 125 psig | SS |
| 7 | EC-2303 | $CO_2$ Compressor 3rd Stage Air Cooler | 4.6 MMBTU/HR DP 235 psig | SS |
| 9 | EC-2201 | Solvent Stripper Bottoms Cooler | 80.3 MMBTU/HR DP 135 psig | SS |
| 9 | FA-2201 | Solvent Stripper Reflux Drum | 5' ID x 16' S/S, DP 35 psig/ FV | 304L |
| 7 | FA-2301 | $CO_2$ Compressor 2nd Stage Suction Drum | 7’ - 6” ID x 10' S/S, DP 75 psig | CS/SS |
| 7 | FA-2303 | Liquid $CO_2$ Surge Drum | 4’ - 6” ID x 14’ S/S, DP 235 psig | KCS |
| 7 | FA-2304 | $CO_2$ Compr. 3rd Stage Discharge KO Drum | 4’ - 6” ID x 10' S/S, DP 235 psig | CS/SS |
| 7 | FA-2401 | Propane Refrigeration Surge Drum | 10' ID x 30' S/S, DP 300 psig | CS |
| 7 | FA-2402 | Propane Refrigeration Suction Scrubber | 8’ - 6” ID x 12’ S/S, DP 300 psig | LTCS |
| 3 | FB-2503 | Caustic Day Tank | 2’ ID x 4’ S/S, DP atm | CS |
| 5 | FD-2101 | DCC Water Filter | 205 gpm ea, DP 35 psig | SS |
| 5 | GA-2101 A/B | Wash Water Pump | 1425 gpm ea, DP 29 psi | DI/SS |
| 5 | GA-2102 A/B | Direct Contact Cooler Water Pump | 205 gpm ea, DP 35 psi | SS/SS |
| 5 | GA-2103 A/B/C/D | Rich Solvent Pump | 3450 gpm ea, DP 92 psi | SS/SS |
| 9 | GA-2201 A/B/C | Lean Solvent Pump | 3000 gpm ea, DP 85 psi | SS/SS |
| 9 | GA-2202 A/B | Solvent Stripper Reflux Pump | 210 gpm ea, DP 75 psi | DI/SS |
| 9 | GA-2203 A/B | Filter Circ. Pump | 290 gpm ea, DP 91 psi | SS/SS |
| 9 | GA-2204 A/B | LP Condensate Booster Pump | 512 gpm ea, DP 237 psi | CI/SS |
| 7 | GA-2301 A/B | $CO_2$ Pipeline Pump | 217 gpm Ea, DP 1815 psi | CS/CS |
| 3 | GA-2501 | Caustic Metering Pump | .45 gpm, DP 50 psi | SS |
| 7 | GB-2301 | $CO_2$ Compressor (Motor driven) | 4480 hp | SS wheels |
| 7 | GB-2401 | Propane Refrigeration Compressor | 3075 hp | LTCS |
| 1 | GB-2500 | LP Steam Turbine/Generator | 83,365 hp | |
| 9 | PA-2551 | Corrosion Inhibitor Package | Metering 25 lb/ hr | |
| 9 | PA-2251 | Solvent Filter Package | 140 gpm | |
| 7 | PA-2351 | $CO_2$ Dryer Package | 4 driers, 200 hp compressor, electric heater, cooler | |
| 1 | | Crane for Compr. Bldg. Flue Gas Ducting | | |
| 1 | PA-2551 | Cooling Tower | 22,000 gpm, includes basin, pumps, chlorine injection | |
| 1 | PA-2552 | Cooling Tower Blowdown Treatment Package | 100 gpm sand filters and de-chlorinator, hypochlorite Storage Tank | |

## 9.3 Appendix III - Economic Sensitivity Studies (Cases 1-5)

This appendix shows the results of a comprehensive economic sensitivity analysis. This analysis was done by varying a number of parameters that effect economic results for each case studied (Total Investment Cost, Capacity Factor, Make-up Power Cost [Levelized], and $CO_2$ by-product Selling Price [Levelized]). A total of 40 economic evaluation cases are reported in this appendix.

The sensitivity parameters listed above were chosen since the base values used for these parameters are site specific to this project or there may be some uncertainty in the value chosen when looking forward in time. Therefore proper use of these sensitivity results could potentially allow extrapolation to apply results to units other than just Conesville #5. The objective of this sensitivity analysis was to determine the relative impacts of the sensitivity parameters and $CO_2$ capture level on incremental cost of electricity and $CO_2$ mitigation cost.

The economic sensitivity results are shown in the tables and graphs, which follow in this appendix. These tables and graphs are grouped according to Case # as indicated in the following list.

- Case 1 – 90% $CO_2$ Capture
- Case 2 – 70% $CO_2$ Capture
- Case 3 – 50% $CO_2$ Capture
- Case 4 – 30% $CO_2$ Capture
- Case 5 – 96% $CO_2$ Capture, Updated Concept A of Previous Study

Each group includes one table and two associated graphs, which follow the table. As such, the results from this sensitivity study are summarized in Table 9-6 to Table 9-10 and plotted in Figure 9-10 to Figure 9-14.

### 9.3.1 Case 1 (90% $CO_2$ Capture)

**Table 9-6: Case 1 (90% $CO_2$ Capture)**

| | | | | | | | | | | | | |
|---|---|---|---|---|---|---|---|---|---|---|---|---|
| **Power Generation** | | | | | | | | | | | | |
| Net Output (MW) | 303.3 | 303.3 | 303.3 | 303.3 | 303.3 | 303.3 | 303.3 | 303.3 | 303.3 | 303.3 | 303.3 | 303.3 |
| Capacity Factor (%) | 85% | 72% | 90% | 85% | 85% | 85% | 85% | 85% | 85% | 85% | 85% | 85% |
| Operating Hours (hrs/yr) | 7,446 | 6,307 | 7,884 | 7,446 | 7,446 | 7,446 | 7,446 | 7,446 | 7,446 | 7,446 | 7,446 | 7,446 |
| Net Efficiency, HHV (%) | 24.5% | 24.5% | 24.5% | 24.5% | 24.5% | 24.5% | 24.5% | 24.5% | 24.5% | 24.5% | 24.5% | 24.5% |
| Net Plant Heat Rate, HHV (Btu/kWh) | 13,984 | 13,984 | 13,984 | 13,984 | 13,984 | 13,984 | 13,984 | 13,984 | 13,984 | 13,984 | 13,984 | 13,984 |
| Coal HHV Input (MMBtu/hr) | 4,229 | 4,229 | 4,229 | 4,229 | 4,229 | 4,229 | 4,229 | 4,229 | 4,229 | 4,229 | 4,229 | 4,229 |
| Net Generation (MWh/yr) | 2,258,498 | 1,913,081 | 2,391,351 | 2,258,498 | 2,258,498 | 2,258,498 | 2,258,498 | 2,258,498 | 2,258,498 | 2,258,498 | 2,258,498 | 2,258,498 |
| | | | | | | | | | | | | |
| **Costs** | | | | | | | | | | | | |
| Total Investment Cost ($1000s) | 400,094 | 400,094 | 400,094 | 300,070 | 500,117 | 400,094 | 400,094 | 400,094 | 400,094 | 400,094 | 400,094 | 400,094 |
| Total Investment Cost ($/kW) | 1,319 | 1,319 | 1,319 | 989 | 1,649 | 1,319 | 1,319 | 1,319 | 1,319 | 1,319 | 1,319 | 1,319 |
| | | | | | | | | | | | | |
| Fixed O&M Costs ($1000/yr) | 2,494 | 2,494 | 2,494 | 2,494 | 2,494 | 2,494 | 2,494 | 2,494 | 2,494 | 2,494 | 2,494 | 2,494 |
| | | | | | | | | | | | | |
| Variable O&M Costs ($1000/yr) | 17,645 | 14,947 | 18,683 | 17,645 | 17,645 | 17,645 | 17,645 | 17,645 | 17,645 | 17,645 | 17,645 | 17,645 |
| | | | | | | | | | | | | |
| Levelized Make-up Power Cost | | | | | | | | | | | | |
| Make-up Power Cost (¢/kWh) | 6.40 | 6.40 | 6.40 | 6.40 | 6.40 | 4.80 | 8.00 | 6.40 | 6.40 | 6.40 | 6.40 | 6.40 |
| Make-up Power Cost ($1000/yr) | 62,194 | 52,682 | 65,852 | 62,194 | 62,194 | 46,645 | 77,742 | 62,194 | 62,194 | 62,194 | 62,194 | 62,194 |
| | | | | | | | | | | | | |
| $CO_2$ By-product Revenue | | | | | | | | | | | | |
| $CO_2$ By-product Selling Price ($/ton) | 0 | 0 | 0 | 0 | 0 | 0 | 0 | 0 | 25.00 | 50.00 | | |
| $CO_2$ By-product (lb/hr) | 779,775 | 779,775 | 779,775 | 779,775 | 779,775 | 779,775 | 779,775 | 779,775 | 779,775 | 779,775 | | |
| $CO_2$ By-product Revenue ($1000/yr) | 0 | 0 | 0 | 0 | 0 | 0 | 0 | 0 | (72,578) | (145,155) | | |
| | | | | | | | | | | | | |
| Feedstock O&M Costs ($1000/yr) | 653 | 553 | 692 | 653 | 653 | 653 | 653 | 653 | 653 | 653 | | |
| Coal Price ($/MMBtu) | 1.80 | 1.80 | 1.80 | 1.80 | 1.80 | 1.80 | 1.80 | 1.80 | 1.80 | 1.80 | | |
| Coal for $CO_2$ System (MMBtu/hr) | 0 | 0 | 0 | 0 | 0 | 0 | 0 | 0 | 0 | 0 | | |
| Coal Cost ($1000/yr) | 0 | 0 | 0 | 0 | 0 | 0 | 0 | 0 | 0 | 0 | | |
| Natural Gas Price ($/MMBtu) | 6.75 | 6.75 | 6.75 | 6.75 | 6.75 | 6.75 | 6.75 | 6.75 | 6.75 | 6.75 | | |
| Natural Gas for $CO_2$ System (MMBtu/hr) | 13.00 | 13.00 | 13.00 | 13.00 | 13.00 | 13.00 | 13.00 | 13.00 | 13.00 | 13.00 | | |
| Natural Gas Cost ($1000/yr) | 653 | 553 | 692 | 653 | 653 | 653 | 653 | 653 | 653 | 653 | | |
| | | | | | | | | | | | | |
| **LCOE Contributions** | | | | | | | | | | | | |
| Capital Component (¢/kWh) | 3.10 | 3.66 | 2.93 | 2.33 | 3.88 | 3.10 | 3.10 | 3.10 | 3.10 | 3.10 | | |
| Fixed O&M (¢/kWh) | 0.13 | 0.15 | 0.12 | 0.13 | 0.13 | 0.13 | 0.13 | 0.13 | 0.13 | 0.13 | | |
| Variable O&M (¢/kWh) | 3.66 | 3.66 | 3.66 | 3.66 | 3.66 | 2.97 | 4.35 | 0.44 | (2.77) | | | |
| Feedstock O&M (¢/kWh) | 0.03 | 0.03 | 0.03 | 0.03 | 0.03 | 0.03 | 0.03 | 0.03 | 0.03 | | | |
| Total, Incremental COE (¢/kWh) | 6.92 | 7.50 | 6.74 | 6.14 | 7.69 | 6.23 | 7.61 | 3.71 | 0.49 | | | |
| | | | | | | | | | | | | |
| $CO_2$ Mitigation Cost ($/ton) | 81 | 88 | 79 | 72 | 90 | 73 | 89 | 43 | 6 | | | |
| $CO_2$ Mitigation Cost ($/tonne) | 89 | 97 | 87 | 79 | 99 | 80 | 98 | 48 | 6 | | | |
| $CO_2$ Capture Cost ($/ton) | 54 | 58 | 52 | 48 | 60 | 48 | 59 | 29 | 4 | | | |
| $CO_2$ Capture Cost ($/tonne) | 59 | 64 | 58 | 53 | 66 | 53 | 65 | 32 | 4 | | | |

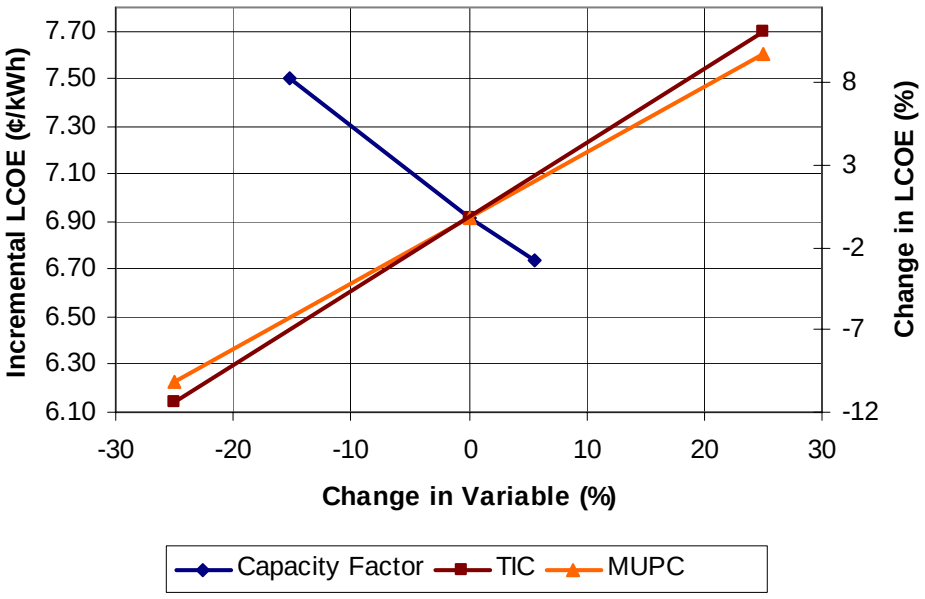


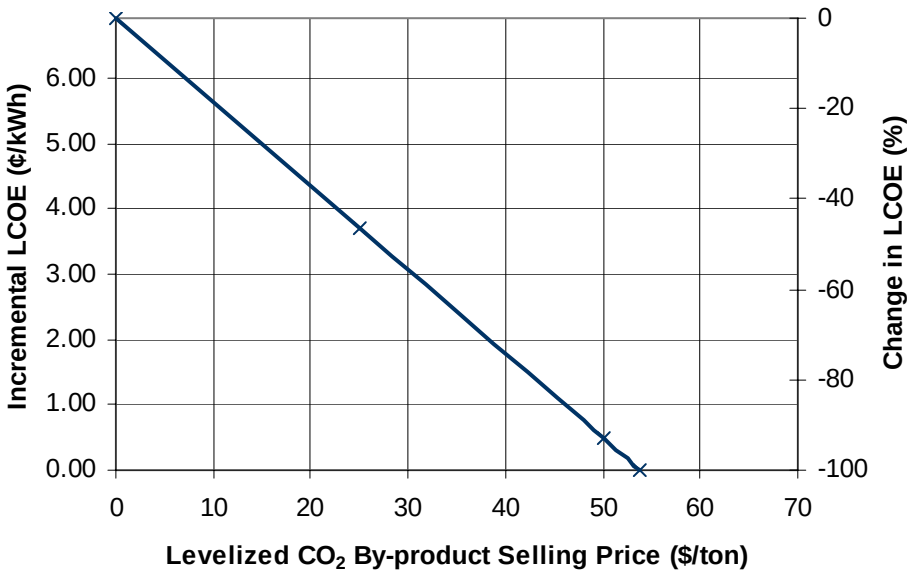


**Figure 9-10: Case 1 Sensitivity Studies (90% $CO_2$ Capture)**

### 9.3.2 Case 2 (70% $CO_2$ Capture)

**Table 9-7: Case 2 (70% $CO_2$ Capture)**

| **Power Generation** | | | | | | | | | | |
|---|---|---|---|---|---|---|---|---|---|---|
| Net Output (MW) | 333.2 | 333.2 | 333.2 | 333.2 | 333.2 | 333.2 | 333.2 | 333.2 | 333.2 | 333.2 |
| Capacity Factor (%) | 85% | 72% | 90% | 85% | 85% | 85% | 85% | 85% | 85% | 85% |
| Operating Hours (hrs/yr) | 7,446 | 6,307 | 7,884 | 7,446 | 7,446 | 7,446 | 7,446 | 7,446 | 7,446 | 7,446 |
| Net Efficiency, HHV (%) | 26.9% | 26.9% | 26.9% | 26.9% | 26.9% | 26.9% | 26.9% | 26.9% | 26.9% | 26.9% |
| Net Plant Heat Rate, HHV (Btu/kWh) | 12,728 | 12,728 | 12,728 | 12,728 | 12,728 | 12,728 | 12,728 | 12,728 | 12,728 | 12,728 |
| Coal HHV Input (MMBtu/hr) | 4,229 | 4,229 | 4,229 | 4,229 | 4,229 | 4,229 | 4,229 | 4,229 | 4,229 | 4,229 |
| Net Generation (MWh/yr) | 2,481,342 | 2,101,843 | 2,627,304 | 2,481,342 | 2,481,342 | 2,481,342 | 2,481,342 | 2,481,342 | 2,481,342 | 2,481,342 |
| | | | | | | | | | | |
| **Costs** | | | | | | | | | | |
| Total Investment Cost ($1000s) | 365,070 | 365,070 | 365,070 | 273,802 | 456,337 | 365,070 | 365,070 | 365,070 | 365,070 | 365,070 |
| Total Investment Cost ($/kW) | 1,095 | 1,095 | 1,095 | 822 | 1,369 | 1,095 | 1,095 | 1,095 | 1,095 | 1,095 |
| | | | | | | | | | | |
| Fixed O&M Costs ($1000/yr) | 2,284 | 2,284 | 2,284 | 2,284 | 2,284 | 2,284 | 2,284 | 2,284 | 2,284 | 2,284 |
| | | | | | | | | | | |
| Variable O&M Costs ($1000/yr) | 14,711 | 12,461 | 15,576 | 14,711 | 14,711 | 14,711 | 14,711 | 14,711 | 14,711 | 14,711 |
| | | | | | | | | | | |
| Levelized Make-up Power Cost | | | | | | | | | | |
| Make-up Power Cost (¢/kWh) | 6.40 | 6.40 | 6.40 | 6.40 | 6.40 | 4.80 | 8.00 | 6.40 | 6.40 | 6.40 |
| Make-up Power Cost ($1000/yr) | 47,926 | 40,597 | 50,746 | 47,926 | 47,926 | 35,945 | 59,908 | 47,926 | 47,926 | 47,926 |
| | | | | | | | | | | |
| $CO_2$ By-product Revenue | | | | | | | | | | |
| $CO_2$ By-product Selling Price ($/ton) | 0 | 0 | 0 | 0 | 0 | 0 | 0 | 25.00 | 50.00 | |
| $CO_2$ By-product (lb/hr) | 607,048 | 607,048 | 607,048 | 607,048 | 607,048 | 607,048 | 607,048 | 607,048 | 607,048 | |
| $CO_2$ By-product Revenue ($1000/yr) | 0 | 0 | 0 | 0 | 0 | 0 | 0 | (56,501) | (113,002) | |
| | | | | | | | | | | |
| Feedstock O&M Costs ($1000/yr) | 488 | 413 | 516 | 488 | 488 | 488 | 488 | 488 | 488 | |
| Coal Price ($/MMBtu) | 1.80 | 1.80 | 1.80 | 1.80 | 1.80 | 1.80 | 1.80 | 1.80 | 1.80 | |
| Coal for $CO_2$ System (MMBtu/hr) | 0 | 0 | 0 | 0 | 0 | 0 | 0 | 0 | 0 | |
| Coal Cost ($1000/yr) | 0 | 0 | 0 | 0 | 0 | 0 | 0 | 0 | 0 | |
| Natural Gas Price ($/MMBtu) | 6.75 | 6.75 | 6.75 | 6.75 | 6.75 | 6.75 | 6.75 | 6.75 | 6.75 | |
| Natural Gas for $CO_2$ System (MMBtu/hr) | 9.70 | 9.70 | 9.70 | 9.70 | 9.70 | 9.70 | 9.70 | 9.70 | 9.70 | |
| Natural Gas Cost ($1000/yr) | 488 | 413 | 516 | 488 | 488 | 488 | 488 | 488 | 488 | |
| | | | | | | | | | | |
| **LCOE Contributions** | | | | | | | | | | |
| Capital Component (¢/kWh) | 2.57 | 3.04 | 2.43 | 1.93 | 3.22 | 2.57 | 2.57 | 2.57 | 2.57 | 2.57 |
| Fixed O&M (¢/kWh) | 0.11 | 0.13 | 0.10 | 0.11 | 0.11 | 0.11 | 0.11 | 0.11 | 0.11 | 0.11 |
| Variable O&M (¢/kWh) | 2.62 | 2.62 | 2.62 | 2.62 | 2.62 | 2.13 | 3.10 | 0.34 | (1.94) | |
| Feedstock O&M (¢/kWh) | 0.02 | 0.02 | 0.02 | 0.02 | 0.02 | 0.02 | 0.02 | 0.02 | 0.02 | |
| Total, Incremental COE (¢/kWh) | 5.32 | 5.81 | 5.17 | 4.68 | 5.97 | 4.84 | 5.80 | 3.04 | 0.77 | |
| | | | | | | | | | | |
| $CO_2$ Mitigation Cost ($/ton) | 88 | 95 | 85 | 77 | 98 | 80 | 95 | 50 | 13 | |
| $CO_2$ Mitigation Cost ($/tonne) | 96 | 105 | 94 | 85 | 108 | 88 | 105 | 55 | 14 | |
| $CO_2$ Capture Cost ($/ton) | 58 | 64 | 57 | 51 | 65 | 53 | 64 | 33 | 8 | |
| $CO_2$ Capture Cost ($/tonne) | 64 | 70 | 63 | 57 | 72 | 59 | 70 | 37 | 9 | |

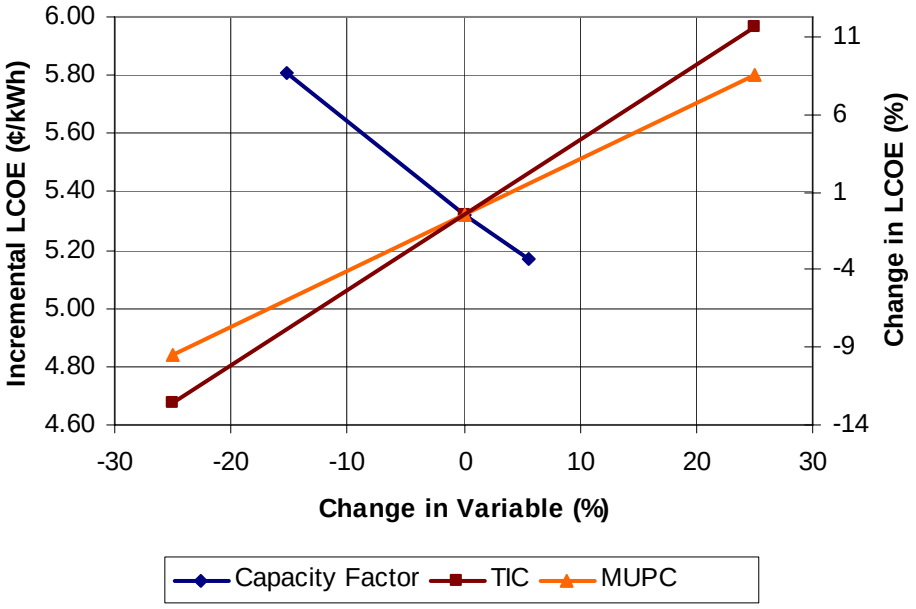


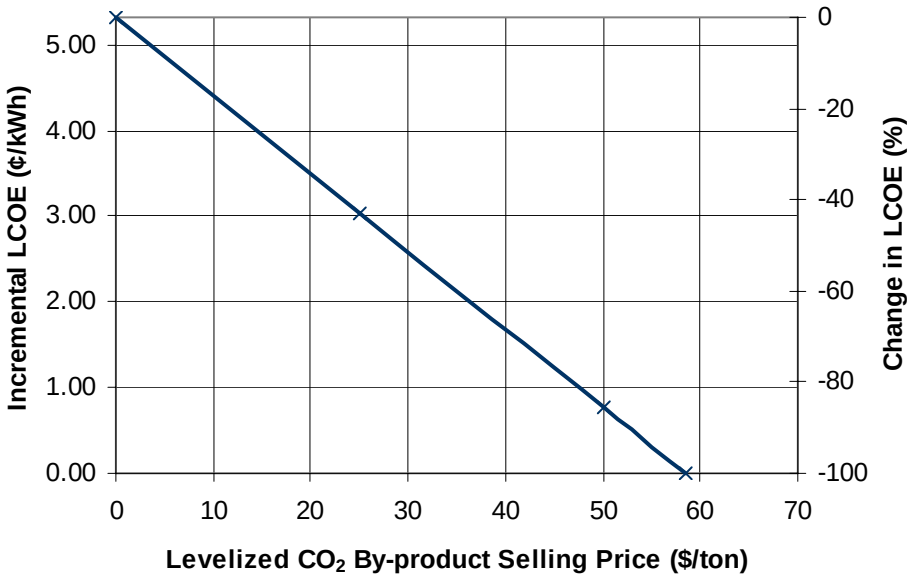


**Figure 9-11: Case 2 Sensitivity Studies (70% $CO_2$ Capture)**

### 9.3.3 Case 3 (50% $CO_2$ Capture)

**Table 9-8: Case 3 (50% $CO_2$ Capture)**

| **Power Generation** | | | | | | | | | |
|---|---|---|---|---|---|---|---|---|---|
| Net Output (MW) | 362.9 | 362.9 | 362.9 | 362.9 | 362.9 | 362.9 | 362.9 | 362.9 | 362.9 |
| Capacity Factor (%) | 85% | 72% | 90% | 85% | 85% | 85% | 85% | 85% | 85% |
| Operating Hours (hrs/yr) | 7,446 | 6,307 | 7,884 | 7,446 | 7,446 | 7,446 | 7,446 | 7,446 | 7,446 |
| Net Efficiency, HHV (%) | 29.3% | 29.3% | 29.3% | 29.3% | 29.3% | 29.3% | 29.3% | 29.3% | 29.3% |
| Net Plant Heat Rate, HHV (Btu/kWh) | 11,686 | 11,686 | 11,686 | 11,686 | 11,686 | 11,686 | 11,686 | 11,686 | 11,686 |
| Coal HHV Input (MMBtu/hr) | 4,229 | 4,229 | 4,229 | 4,229 | 4,229 | 4,229 | 4,229 | 4,229 | 4,229 |
| Net Generation (MWh/yr) | 2,702,488 | 2,289,167 | 2,861,458 | 2,702,488 | 2,702,488 | 2,702,488 | 2,702,488 | 2,702,488 | 2,702,488 |
| | | | | | | | | | |
| **Costs** | | | | | | | | | |
| Total Investment Cost ($1000s) | 280,655 | 280,655 | 280,655 | 210,491 | 350,818 | 280,655 | 280,655 | 280,655 | 280,655 |
| Total Investment Cost ($/kW) | 773 | 773 | 773 | 580 | 967 | 773 | 773 | 773 | 773 |
| | | | | | | | | | |
| Fixed O&M Costs ($1000/yr) | 2,079 | 2,079 | 2,079 | 2,079 | 2,079 | 2,079 | 2,079 | 2,079 | 2,079 |
| | | | | | | | | | |
| Variable O&M Costs ($1000/yr) | 10,876 | 9,212 | 11,516 | 10,876 | 10,876 | 10,876 | 10,876 | 10,876 | 10,876 |
| | | | | | | | | | |
| Levelized Make-up Power Cost | | | | | | | | | |
| Make-up Power Cost (¢/kWh) | 6.40 | 6.40 | 6.40 | 6.40 | 6.40 | 4.80 | 8.00 | 6.40 | 6.40 |
| Make-up Power Cost ($1000/yr) | 33,768 | 28,603 | 35,754 | 33,768 | 33,768 | 25,326 | 42,210 | 33,768 | 33,768 |
| | | | | | | | | | |
| $CO_2$ By-product Revenue | | | | | | | | | |
| $CO_2$ By-product Selling Price ($/ton) | 0 | 0 | 0 | 0 | 0 | 0 | 0 | 25.00 | 50.00 |
| $CO_2$ By-product (lb/hr) | 433,606 | 433,606 | 433,606 | 433,606 | 433,606 | 433,606 | 433,606 | 433,606 | 433,606 |
| $CO_2$ By-product Revenue ($1000/yr) | 0 | 0 | 0 | 0 | 0 | 0 | 0 | (40,358) | (80,716) |
| | | | | | | | | | |
| Feedstock O&M Costs ($1000/yr) | 337 | 285 | 357 | 337 | 337 | 337 | 337 | 337 | 337 |
| Coal Price ($/MMBtu) | 1.80 | 1.80 | 1.80 | 1.80 | 1.80 | 1.80 | 1.80 | 1.80 | 1.80 |
| Coal for $CO_2$ System (MMBtu/hr) | 0 | 0 | 0 | 0 | 0 | 0 | 0 | 0 | 0 |
| Coal Cost ($1000/yr) | 0 | 0 | 0 | 0 | 0 | 0 | 0 | 0 | 0 |
| Natural Gas Price ($/MMBtu) | 6.75 | 6.75 | 6.75 | 6.75 | 6.75 | 6.75 | 6.75 | 6.75 | 6.75 |
| Natural Gas for $CO_2$ System (MMBtu/hr) | 6.70 | 6.70 | 6.70 | 6.70 | 6.70 | 6.70 | 6.70 | 6.70 | 6.70 |
| Natural Gas Cost ($1000/yr) | 337 | 285 | 357 | 337 | 337 | 337 | 337 | 337 | 337 |
| | | | | | | | | | |
| **LCOE Contributions** | | | | | | | | | |
| Capital Component (¢/kWh) | 1.82 | 2.15 | 1.72 | 1.36 | 2.27 | 1.82 | 1.82 | 1.82 | 1.82 |
| Fixed O&M (¢/kWh) | 0.09 | 0.11 | 0.08 | 0.09 | 0.09 | 0.09 | 0.09 | 0.09 | 0.09 |
| Variable O&M (¢/kWh) | 1.72 | 1.72 | 1.72 | 1.72 | 1.72 | 1.40 | 2.03 | 0.22 | (1.27) |
| Feedstock O&M (¢/kWh) | 0.01 | 0.01 | 0.01 | 0.01 | 0.01 | 0.01 | 0.01 | 0.01 | 0.01 |
| Total, Incremental COE (¢/kWh) | 3.64 | 3.98 | 3.53 | 3.18 | 4.09 | 3.32 | 3.95 | 2.14 | 0.65 |
| | | | | | | | | | |
| $CO_2$ Mitigation Cost ($/ton) | 91 | 99 | 88 | 79 | 102 | 83 | 98 | 53 | 16 |
| $CO_2$ Mitigation Cost ($/tonne) | 100 | 109 | 97 | 87 | 112 | 91 | 108 | 59 | 18 |
| $CO_2$ Capture Cost ($/ton) | 61 | 67 | 59 | 53 | 68 | 56 | 66 | 36 | 11 |
| $CO_2$ Capture Cost ($/tonne) | 67 | 73 | 65 | 59 | 75 | 61 | 73 | 40 | 12 |

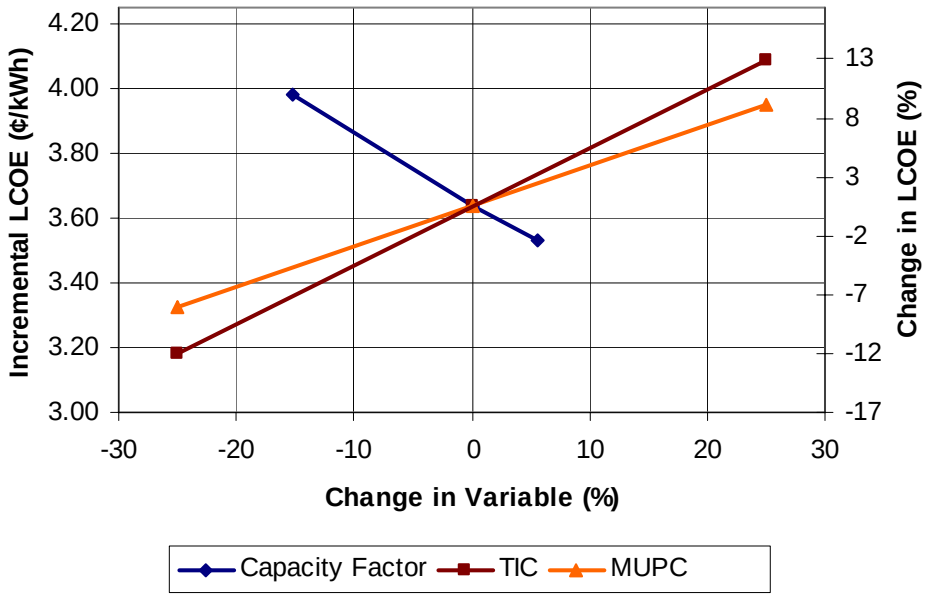


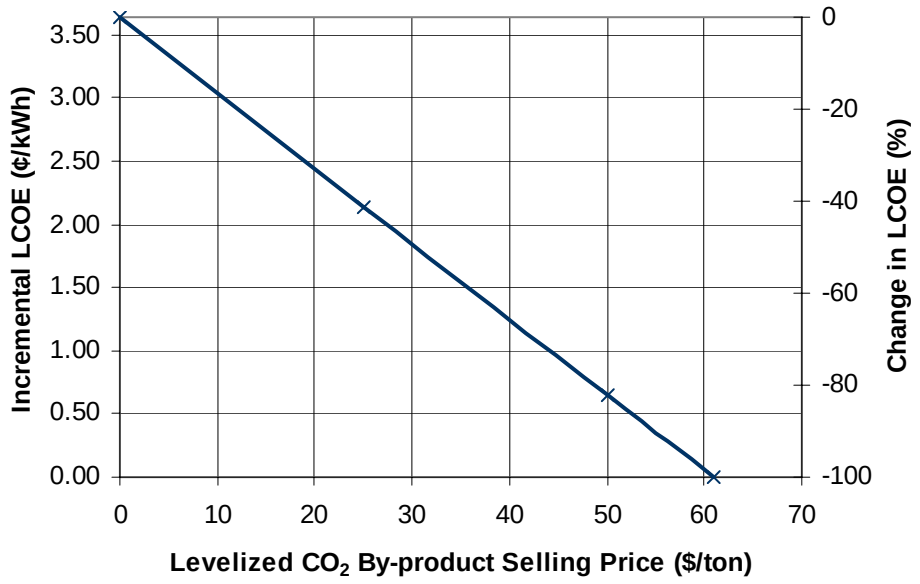


**Figure 9-12: Case 2 Sensitivity Studies (50% $CO_2$ Capture)**

### 9.3.4 Case 4 (30% $CO_2$ Capture)

**Table 9-9: Case 4 (30% $CO_2$ Capture)**

| | | | | | | | | | | | | |
|---|---|---|---|---|---|---|---|---|---|---|---|---|
| **Power Generation** | | | | | | | | | | | | |
| Net Output (MW) | 392.1 | 392.1 | 392.1 | 392.1 | 392.1 | 392.1 | 392.1 | 392.1 | 392.1 | 392.1 | 392.1 | 392.1 |
| Capacity Factor (%) | 85% | 72% | 90% | 85% | 85% | 85% | 85% | 85% | 85% | 85% | 85% | 85% |
| Operating Hours (hrs/yr) | 7,446 | 6,307 | 7,884 | 7,446 | 7,446 | 7,446 | 7,446 | 7,446 | 7,446 | 7,446 | 7,446 | 7,446 |
| Net Efficiency, HHV (%) | 31.7% | 31.7% | 31.7% | 31.7% | 31.7% | 31.7% | 31.7% | 31.7% | 31.7% | 31.7% | 31.7% | 31.7% |
| Net Plant Heat Rate, HHV (Btu/kWh) | 10,818 | 10,818 | 10,818 | 10,818 | 10,818 | 10,818 | 10,818 | 10,818 | 10,818 | 10,818 | 10,818 | 10,818 |
| Coal HHV Input (MMBtu/hr) | 4,229 | 4,229 | 4,229 | 4,229 | 4,229 | 4,229 | 4,229 | 4,229 | 4,229 | 4,229 | 4,229 | 4,229 |
| Net Generation (MWh/yr) | 2,919,331 | 2,472,845 | 3,091,056 | 2,919,331 | 2,919,331 | 2,919,331 | 2,919,331 | 2,919,331 | 2,919,331 | 2,919,331 | 2,919,331 | 2,919,331 |
| | | | | | | | | | | | | |
| **Costs** | | | | | | | | | | | | |
| Total Investment Cost ($1000s) | 211,835 | 211,835 | 211,835 | 158,876 | 264,794 | 211,835 | 211,835 | 211,835 | 211,835 | 211,835 | 211,835 | 211,835 |
| Total Investment Cost ($/kW) | 540 | 540 | 540 | 405 | 675 | 540 | 540 | 540 | 540 | 540 | 540 | 540 |
| | | | | | | | | | | | | |
| Fixed O&M Costs ($1000/yr) | 1,869 | 1,869 | 1,869 | 1,869 | 1,869 | 1,869 | 1,869 | 1,869 | 1,869 | 1,869 | 1,869 | 1,869 |
| | | | | | | | | | | | | |
| Variable O&M Costs ($1000/yr) | 7,019 | 5,945 | 7,432 | 7,019 | 7,019 | 7,019 | 7,019 | 7,019 | 7,019 | 7,019 | 7,019 | 7,019 |
| | | | | | | | | | | | | |
| Levelized Make-up Power Cost | | | | | | | | | | | | |
| Make-up Power Cost (¢/kWh) | 6.40 | 6.40 | 6.40 | 6.40 | 6.40 | 4.80 | 8.00 | 6.40 | 6.40 | 6.40 | 6.40 | 6.40 |
| Make-up Power Cost ($1000/yr) | 19,885 | 16,843 | 21,054 | 19,885 | 19,885 | 14,913 | 24,856 | 19,885 | 19,885 | 19,885 | 19,885 | 19,885 |
| | | | | | | | | | | | | |
| $CO_2$ By-product Revenue | | | | | | | | | | | | |
| $CO_2$ By-product Selling Price ($/ton) | 0 | 0 | 0 | 0 | 0 | 0 | 0 | 0 | 25.00 | 50.00 | 0 | 0 |
| $CO_2$ By-product (lb/hr) | 260,163 | 260,163 | 260,163 | 260,163 | 260,163 | 260,163 | 260,163 | 260,163 | 260,163 | 260,163 | 260,163 | 260,163 |
| $CO_2$ By-product Revenue ($1000/yr) | 0 | 0 | 0 | 0 | 0 | 0 | 0 | 0 | (24,215) | (48,429) | 0 | 0 |
| | | | | | | | | | | | | |
| Feedstock O&M Costs ($1000/yr) | 211 | 179 | 224 | 211 | 211 | 211 | 211 | 211 | 211 | 211 | 211 | 211 |
| Coal Price ($/MMBtu) | 1.80 | 1.80 | 1.80 | 1.80 | 1.80 | 1.80 | 1.80 | 1.80 | 1.80 | 1.80 | 1.80 | 1.80 |
| Coal for $CO_2$ System (MMBtu/hr) | 0 | 0 | 0 | 0 | 0 | 0 | 0 | 0 | 0 | 0 | 0 | 0 |
| Coal Cost ($1000/yr) | 0 | 0 | 0 | 0 | 0 | 0 | 0 | 0 | 0 | 0 | 0 | 0 |
| Natural Gas Price ($/MMBtu) | 6.75 | 6.75 | 6.75 | 6.75 | 6.75 | 6.75 | 6.75 | 6.75 | 6.75 | 6.75 | 6.75 | 6.75 |
| Natural Gas for $CO_2$ System (MMBtu/hr) | 4.20 | 4.20 | 4.20 | 4.20 | 4.20 | 4.20 | 4.20 | 4.20 | 4.20 | 4.20 | 4.20 | 4.20 |
| Natural Gas Cost ($1000/yr) | 211 | 179 | 224 | 211 | 211 | 211 | 211 | 211 | 211 | 211 | 211 | 211 |
| | | | | | | | | | | | | |
| **LCOE Contributions** | | | | | | | | | | | | |
| Capital Component (¢/kWh) | 1.27 | 1.50 | 1.20 | 0.95 | 1.59 | 1.27 | 1.27 | 1.27 | 1.27 | 1.27 | 1.27 | 1.27 |
| Fixed O&M (¢/kWh) | 0.07 | 0.09 | 0.07 | 0.07 | 0.07 | 0.07 | 0.07 | 0.07 | 0.07 | 0.07 | 0.07 | 0.07 |
| Variable O&M (¢/kWh) | 0.96 | 0.96 | 0.96 | 0.96 | 0.96 | 0.79 | 1.13 | 0.13 | 0.13 | (0.70) | 0.13 | 0.13 |
| Feedstock O&M (¢/kWh) | 0.01 | 0.01 | 0.01 | 0.01 | 0.01 | 0.01 | 0.01 | 0.01 | 0.01 | 0.01 | 0.01 | 0.01 |
| Total, Incremental COE (¢/kWh) | 2.31 | 2.55 | 2.24 | 1.99 | 2.63 | 2.14 | 2.48 | 1.48 | 1.48 | 0.65 | 1.48 | 1.48 |
| | | | | | | | | | | | | |
| $CO_2$ Mitigation Cost ($/ton) | 103 | 114 | 99 | 89 | 117 | 95 | 110 | 66 | 66 | 29 | 66 | 66 |
| $CO_2$ Mitigation Cost ($/tonne) | 113 | 125 | 110 | 98 | 129 | 105 | 122 | 73 | 73 | 32 | 73 | 73 |
| $CO_2$ Capture Cost ($/ton) | 70 | 77 | 67 | 60 | 79 | 65 | 75 | 45 | 45 | 20 | 45 | 45 |
| $CO_2$ Capture Cost ($/tonne) | 77 | 85 | 74 | 66 | 87 | 71 | 82 | 49 | 49 | 22 | 49 | 49 |

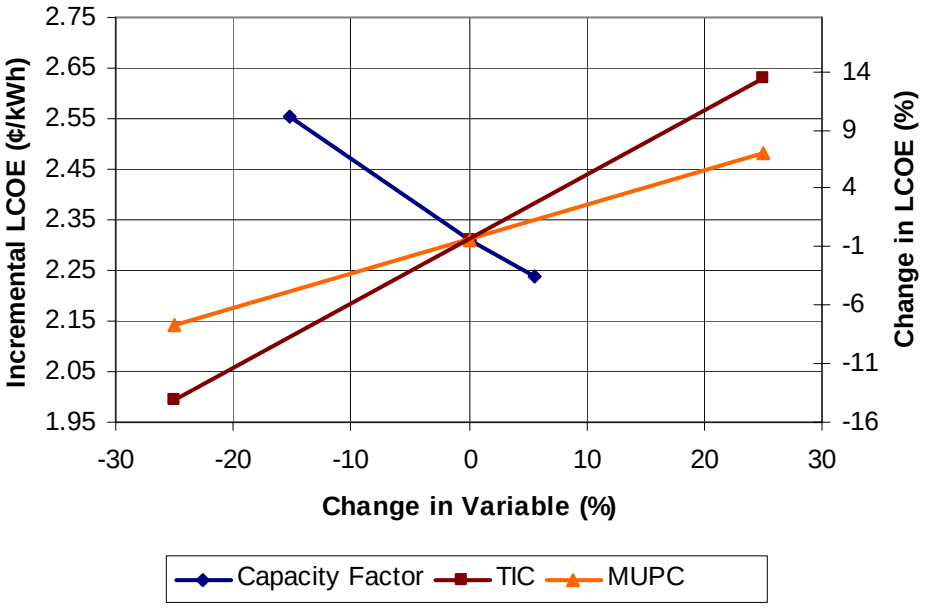


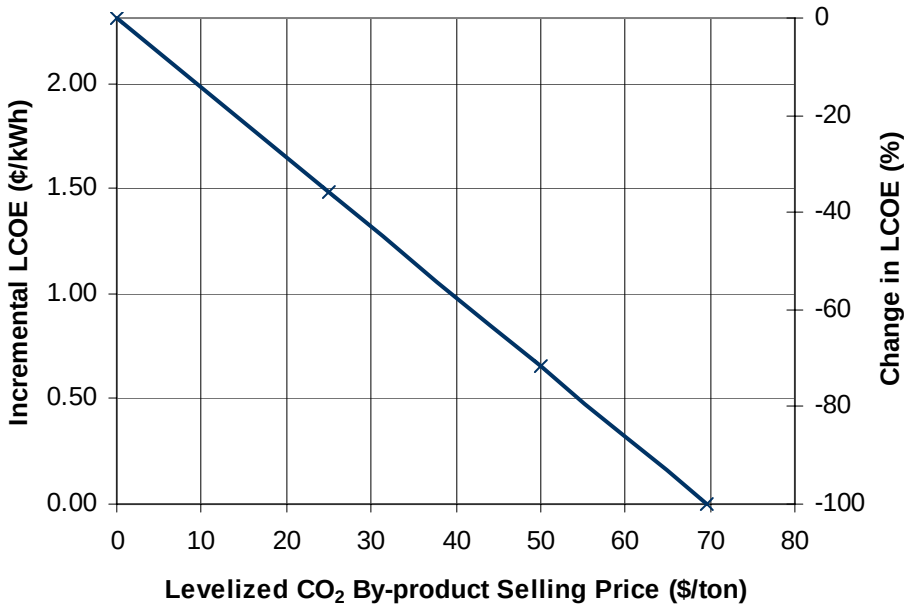


**Figure 9-13: Case 4 Sensitivity Studies (30% $CO_2$ Capture)**

### 9.3.5 Case 5 (96% $CO_2$ Capture)

**Table 9-10: Case 5 (96% $CO_2$ Capture)**

| | | | | | | | | | | | | |
|---|---|---|---|---|---|---|---|---|---|---|---|---|
| **Power Generation** | | | | | | | | | | | | |
| Net Output (MW) | 251.6 | 251.6 | 251.6 | 251.6 | 251.6 | 251.6 | 251.6 | 251.6 | 251.6 | 251.6 | 251.6 | 251.6 |
| Capacity Factor (%) | 85% | 72% | 90% | 85% | 85% | 85% | 85% | 85% | 85% | 85% | 85% | 85% |
| Operating Hours (hrs/yr) | 7,446 | 6,307 | 7,884 | 7,446 | 7,446 | 7,446 | 7,446 | 7,446 | 7,446 | 7,446 | 7,446 | 7,446 |
| Net Efficiency, HHV (%) | 20.3% | 20.3% | 20.3% | 20.3% | 20.3% | 20.3% | 20.3% | 20.3% | 20.3% | 20.3% | 20.3% | 20.3% |
| Net Plant Heat Rate, HHV (Btu/kWh) | 16,856 | 16,856 | 16,856 | 16,856 | 16,856 | 16,856 | 16,856 | 16,856 | 16,856 | 16,856 | 16,856 | 16,856 |
| Total Fuel Heat Input at MCR (MMBtu/hr) | 4,242 | 4,242 | 4,242 | 4,242 | 4,242 | 4,242 | 4,242 | 4,242 | 4,242 | 4,242 | 4,242 | 4,242 |
| Coal HHV Input (MMBtu/hr) | 4,229 | 4,229 | 4,229 | 4,229 | 4,229 | 4,229 | 4,229 | 4,229 | 4,229 | 4,229 | 4,229 | 4,229 |
| Net Generation (MWh/yr) | 1,873,667 | 1,587,106 | 1,983,882 | 1,873,667 | 1,873,667 | 1,873,667 | 1,873,667 | 1,873,667 | 1,873,667 | 1,873,667 | 1,873,667 | 1,873,667 |
| | | | | | | | | | | | | |
| **Costs** | | | | | | | | | | | | |
| Total Investment Cost ($1000s) | 701,057 | 701,057 | 701,057 | 525,793 | 876,322 | 701,057 | 701,057 | 701,057 | 701,057 | 701,057 | 701,057 | 701,057 |
| Total Investment Cost ($/kW) | 2,786 | 2,786 | 2,786 | 2,090 | 3,483 | 2,786 | 2,786 | 2,786 | 2,786 | 2,786 | 2,786 | 2,786 |
| | | | | | | | | | | | | |
| Fixed O&M Costs ($1000/yr) | 2,488 | 2,488 | 2,488 | 2,488 | 2,488 | 2,488 | 2,488 | 2,488 | 2,488 | 2,488 | 2,488 | 2,488 |
| | | | | | | | | | | | | |
| Variable O&M Costs ($1000/yr) | 18,640 | 15,789 | 19,737 | 18,640 | 18,640 | 18,640 | 18,640 | 18,640 | 18,640 | 18,640 | 18,640 | 18,640 |
| | | | | | | | | | | | | |
| Levelized Make-up Power Cost | | | | | | | | | | | | |
| Make-up Power Cost (¢/kWh) | 6.40 | 6.40 | 6.40 | 6.40 | 6.40 | 4.80 | 8.00 | 6.40 | 6.40 | 6.40 | 6.40 | 6.40 |
| Make-up Power Cost ($1000/yr) | 86,832 | 73,552 | 91,940 | 86,832 | 86,832 | 65,124 | 108,540 | 86,832 | 86,832 | 86,832 | 86,832 | 86,832 |
| | | | | | | | | | | | | |
| $CO_2$ By-product Revenue | | | | | | | | | | | | |
| $CO_2$ By-product Selling Price ($/ton) | 0 | 0 | 0 | 0 | 0 | 0 | 0 | 0 | 25.00 | 50.00 | | |
| $CO_2$ By-product (lb/hr) | 835,053 | 835,053 | 835,053 | 835,053 | 835,053 | 835,053 | 835,053 | 835,053 | 835,053 | 835,053 | | |
| $CO_2$ By-product Revenue ($1000/yr) | 0 | 0 | 0 | 0 | 0 | 0 | 0 | 0 | (77,723) | (155,445) | | |
| | | | | | | | | | | | | |
| Feedstock O&M Costs ($1000/yr) | 890 | 754 | 942 | 890 | 890 | 890 | 890 | 890 | 890 | 890 | | |
| Coal Price ($/MMBtu) | 1.80 | 1.80 | 1.80 | 1.80 | 1.80 | 1.80 | 1.80 | 1.80 | 1.80 | 1.80 | | |
| Coal for $CO_2$ System (MMBtu/hr) | 0 | 0 | 0 | 0 | 0 | 0 | 0 | 0 | 0 | 0 | | |
| Coal Cost ($1000/yr) | 0 | 0 | 0 | 0 | 0 | 0 | 0 | 0 | 0 | 0 | | |
| Natural Gas Price ($/MMBtu) | 6.75 | 6.75 | 6.75 | 6.75 | 6.75 | 6.75 | 6.75 | 6.75 | 6.75 | 6.75 | | |
| Natural Gas for $CO_2$ System (MMBtu/hr) | 17.70 | 17.70 | 17.70 | 17.70 | 17.70 | 17.70 | 17.70 | 17.70 | 17.70 | 17.70 | | |
| Natural Gas Cost ($1000/yr) | 890 | 754 | 942 | 890 | 890 | 890 | 890 | 890 | 890 | 890 | | |
| | | | | | | | | | | | | |
| **LCOE Contributions** | | | | | | | | | | | | |
| Capital Component (¢/kWh) | 6.55 | 7.73 | 6.18 | 4.91 | 8.18 | 6.55 | 6.55 | 6.55 | 6.55 | 6.55 | 6.55 | 6.55 |
| Fixed O&M (¢/kWh) | 0.15 | 0.18 | 0.15 | 0.15 | 0.15 | 0.15 | 0.15 | 0.15 | 0.15 | 0.15 | 0.15 | 0.15 |
| Variable O&M (¢/kWh) | 5.79 | 5.79 | 5.79 | 5.79 | 5.79 | 4.63 | 6.94 | 1.64 | (2.51) | | | |
| Feedstock O&M (¢/kWh) | 0.06 | 0.06 | 0.06 | 0.06 | 0.06 | 0.06 | 0.06 | 0.06 | 0.06 | 0.06 | | |
| Total, Incremental COE (¢/kWh) | 12.54 | 13.75 | 12.17 | 10.91 | 14.18 | 11.38 | 13.70 | 8.39 | 4.25 | | | |
| | | | | | | | | | | | | |
| $CO_2$ Mitigation Cost ($/ton) | 134 | 147 | 130 | 117 | 152 | 122 | 147 | 90 | 46 | | | |
| $CO_2$ Mitigation Cost ($/tonne) | 148 | 163 | 144 | 129 | 168 | 135 | 162 | 99 | 50 | | | |
| $CO_2$ Capture Cost ($/ton) | 76 | 83 | 73 | 66 | 85 | 69 | 83 | 51 | 26 | | | |
| $CO_2$ Capture Cost ($/tonne) | 83 | 91 | 81 | 72 | 94 | 76 | 91 | 56 | 28 | | | |

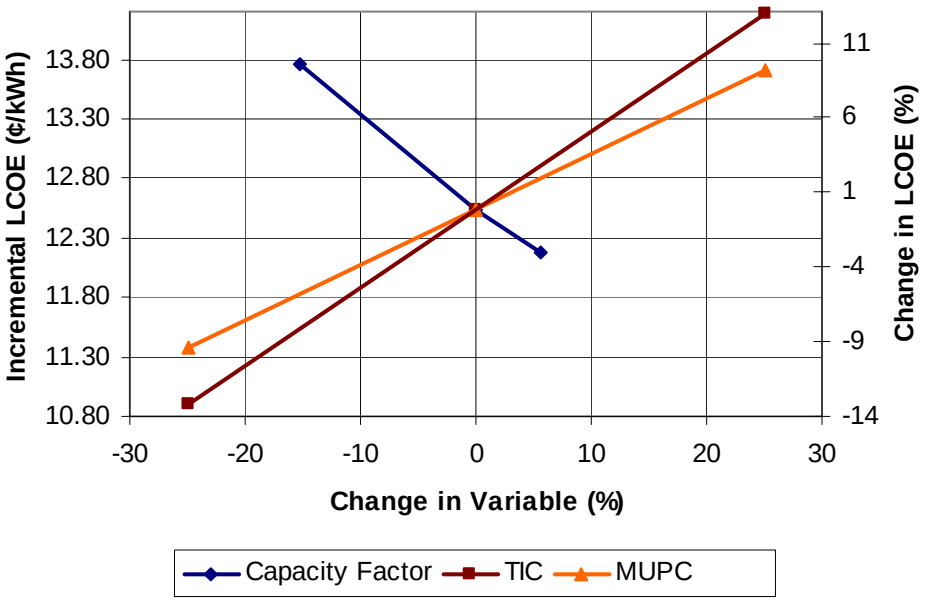


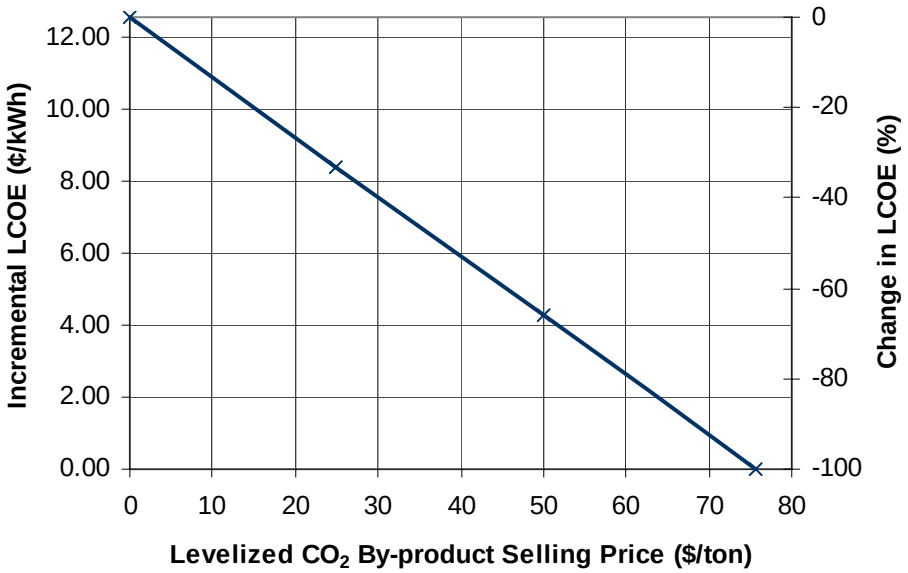


**Figure 9-14: Case 5 Sensitivity Studies (96% $CO_2$ Capture)**

## 9.4 Appendix IV – Let Down Turbine Technical Information (Cases 1 and 4)

This appendix provides technical information regarding the let down turbines used for Case 1 (90% $CO_2$ capture) and Case 4 (30% $CO_2$ capture). Three attachments are provided as listed below:

- Attachment A: Steam Turbine and Auxiliaries General Technical Information (applicable to both the 90% and 30% $CO_2$ recovery let down turbines)
- Attachment B: Information specific to the Case 1 let down turbine (90% $CO_2$ capture)
- Attachment C: Information specific to the Case 4 let down turbine (30% $CO_2$ capture turbine)

**Attachment A:**

**Steam Turbine and Auxiliaries General Technical Information (applicable to both the 90% and 30% $CO_2$ recovery let down turbines)**

## 1. GENERAL DESIGN INFORMATION

### 1.1 TURBINE

The turbine is a multistage straight backpressure single line type with the shaft aligned horizontally. Its casing consists of a fabricated steel structure made from welded steel plates. Steam is admitted through two inlet openings located on the top and the bottom of the inlet box, respectively. The upper part of this casing is welded to the duct (out of scope of supply).

The turbine rotor is fabricated of high chromium steel with the coupling disc at the generator side being an integral part of it.

### 1.2 TURBINE CHOKE VALVES

IP steam is admitted through one quick-closing choke valve and two control choke valves, located at the side of the turbine.

The quick-closing choke valves are arranged in front of the control choke valve.

### 1.3 BEARINGS

Turbine rotor is supported with two hydrodynamic bearings. The bearings are supplied with high pressure jacking oil at start up and in case of low speed rotor rotations.

### 1.4 TURNING GEAR

The turbine front pedestal will be equipped with a motor driven turning gear with automatic operation control system.

The turning gear is capable of starting the unit from standstill and rotating the turbine-generator shaft line continuously at recommended turning speed with normal lube oil pressure.

### 1.5 TECHNICAL DATA OF THE TURBINE

Please refer to the specific turbine under consideration (see separate attachment).

## 2. GENERATOR

The generator is an air-cooled generator running at 3,600 rpm.

For more specific information on the generator under consideration, please refer to the generator description in the separate attachment.

# AUXILIARY SYSTEMS

## 3.1 TURBINE SUPERVISORY SYSTEM

The turbine supervisory system ensures supervision of turbine/generator unit shaft-line critical operating parameters (e.g.:turbine and generator journal bearings temperatures and vibration levels and turbine thrust bearing temperature and wearing).

The supervisory system is connected with the turbine safety system and may generate alarm and tripping signals through adjustable monitoring consoles.

## 3.2 TURBINE SAFETY AND PROTECTION SYSTEM

The safety and protection system is able to stop the steam turbine by a quick, automatic closing of choke valves.

A turbine trip may be initiated either automatically or by action of an operator under instruction. In faulty conditions of a monitored parameter, a threshold detector emits an alarm and, in the worst case, may even promote an automatic trip.

## 3.3 STEAM TURBINE GOVERNING SYSTEM

The Steam Turbine Governing System governs the position of the control choke valve. This control system ensures the following functions:

- Control of the turbine generator speed (frequency in island operation) when the generator is not coupled to the grid
- Control of the turbo-generator load when the generator is coupled to the grid

In normal operation the system operates with a sliding pressure at inlet at the maximum opening of the turbine with a load limitation.

## 3.4 GLAND STEAM SYSTEM

Correct operation of the turbine requires clearances between fixed and moving parts, through which steam tends to leak. The gland steam system ensures that no steam escapes from valves and shaft glands into the turbine room.

## 3.5 DRAIN SYSTEM

The drains have the following purposes:

- To eliminate the condensates in order to avoid damages to the machine,
- To ensure the thermal conditioning of the turbine by steam circulation from glands when the control valves are closed or just opened.

## 3.6 OIL SYSTEM

One complete combined lube and control oil system is feeding two separate circuits.

The function of this system is to ensure, on one side, the lubrication and cooling of journal bearings, and the thrust bearing, for the whole set (turbine, generator), and on the other side, the control oil of the turbine. It consists mainly of a packaged oil tank. Electrically driven positive displacement (main and auxiliary) and centrifugal (emergency) pumps are vertically submerged in this oil tank.

Two full duty oil coolers are arranged in parallel on oil and cooling water circuits with a changeover oil valve to change the cooler on duty without interruption of the oil flow to the bearings. An emergency standby pump delivers lube oil without passing through the coolers and filters.

The control and safety and protection systems use the common lube and control oil for actuation of valves.

## 4. SCOPE OF SUPPLY AND LIMITS OF DELIVERY

### 4.1 SCOPE OF DELIVERY

**Table 9-11: Let Down Turbine Scope of Delivery**

| Item No. | Description | Quantity per one unit | Remarks |
|---|---|---|---|
| 1. | Complete turbine:<br>A) turbine casing<br>B) bladed rotor<br>C) blade carrier with fixed blades<br>D) end gland seals | 1 set | Including insulation |
| 2. | Turbine steam admission system consists of quick closing and control choke valves | 1 set | Including insulation |
| 3. | Complete turbine pedestals with bearings and elements necessary for the shaft line adjustment and pedestal survey | 1 set | |
| 4. | Turbine-Generator coupling | 1 set | |
| 5. | Complete electrical turning gear with clutch and hand turning facility | 1 set | |
| 6. | Handling devices for steam turbine components | 1 set | |
| 7. | Complete gland steam system including:<br>A) pressure reducing valve,<br>B) piping and valves,<br>C) gland steam condenser | 1 set | |
| 8. | Complete oil systems including:<br>A) pumps (main, auxiliary, emergency),<br>B) oil tank,<br>C) coolers (2 x 100%),<br>D) oil filter (duplex)<br>E) piping and valves,<br>F) oil mist and separator,<br>G) oil tank drain piping (ending with isolating valves) | 1 set | |
| 9. | Complete air cooled generator with excitation system and AVR | 1 set | |

| | | | |
|---|---|---|---|
| 10. | Handling devices for generator components | 1 set | |
| 11. | T/G control and protection system:<br>A) system cubicle,<br>B) hardware,<br>C) software,<br>D) speed probes | 1 set | |
| 12. | T/G supervisory equipment (TSE):<br>A) instrument rack incl. power supply<br>B) probes and sensors with connection to local junction boxes, transmitters, etc.,<br>C) proximitors and monitors,<br>D) software | 1 set | |
| 13. | Instrumentation and cables for the T/G and auxiliaries | 1 set | Cabling up to local junction boxes |
| 14. | Special tools | 1 set | |
| 15. | Spare parts for start-up | 1 set | |
| 16. | Mandatory spare parts | 1 set | |
| 17. | Documentation:<br>A) quality,<br>B) assembly,<br>C) manuals | 1 set | English versions only |

## 4.2 LIMITS OF DELIVERY

The scope of supply as mentioned in Table 9-11 above is limited to the following boundaries:

| | |
|---|---|
| Steam: | Inlet weld connection on IP steam admission valve<br>Outlet weld connection on LP casing (upper exhaust) |
| Cooling water | Inlet/outlet of cooling water flange connections at lube oil coolers. |
| Condensate/Feedwater: | Inlet weld connection at LP turbine hood spray water stop valve. |
| Gland system: | Inlet connection at gland steam supply control valve.<br>Outlet flange at gland steam condenser exhaust ventilator fan.<br>Feedwater inlet/outlet flange connections at gland steam condenser.<br>Condensate outlet flange at gland steam condenser. |
| Lube oil system: | Outlet flange at vapour ventilator fan of oil tank<br>Supply and drain connections on lube oil tank. |
| Elec. equipment: | Terminals at motor terminal boxes.<br>Terminals at plant mounted local junction boxes. |
| I&C: | Terminals at control cubicles<br>Terminals at local junction boxes |
| Generator: | Output terminals of the generator and brush gear,<br>Output terminals of the generator and brush gear measuring boxes,<br>Output terminals of the noise hood measuring boxes,<br>Output and input terminals in the excitation system cubicle,<br>Output and input flanges on the coolers |

**Attachment B:**

**Steam Turbine and Auxiliaries for Case 1 Let Down Turbine (90% $CO_2$ removal)**

## 1. TECHNICAL DATA OF THE TURBINE

| Parameter | Unit | Value |
|---|---|---|
| Number of casings | - | 1 |
| Nominal speed | rpm | 3,600 |
| Plant cycle | - | single flash |
| Inlet pressure psia | 200 | |
| Temperature | °F | 711 |
| Exhaust pressure | psia | 47 |
| Gross Electric Power Output (at generator terminals) | kW | 48,030 |

## 2. GENERATOR

The generator is an air-cooled generator running at 3600 rpm. It is designed for a nominal active power of 50.00 MW at a power factor of 0.9. A general arrangement drawing is shown in Figure 9-15.

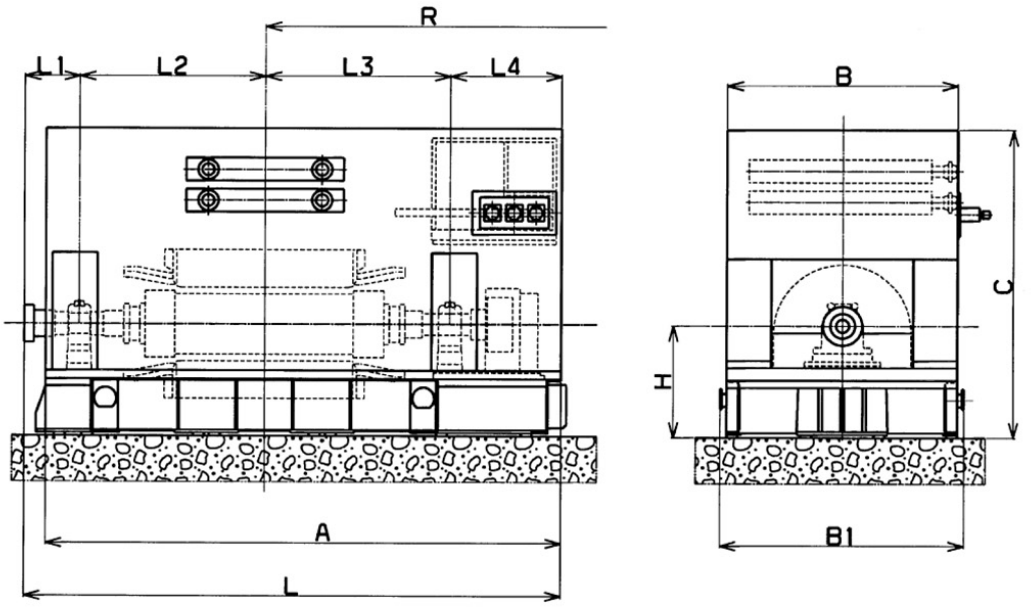


| MAIN FEATURES | | | APPROXIMATE DIMENSIONS mm. | APPROXIMATE DIMENSIONS in. | APPROXIMATE WEIGHTS | | APPROXIMATE WEIGHTS tons | APPROXIMATE WEIGHTS lbs. |
|---|---|---|---|---|---|---|---|---|
| Water / air cooled | A | : | 7 252 | 285.5 | Stator | : | 53.0 | 116 800 |
| | B | : | 3 150 | 124.0 | Rotor + Exciter armature | : | 18.0 | 39 700 |
| Brushless exciter | B1 | : | 3 330 | 131.1 | Bearings | : | 1.6 | 3 500 |
| | C | : | 4 200 | 165.4 | Base frame | : | 12.1 | 26 700 |
| Soundproofed housing | H | : | 1 500 | 59.1 | Exciter field | : | 0.7 | 1 500 |
| | L | : | 7 352 | 289.5 | Housing | : | 12.0 | 26 400 |
| Protection degree IP 54 | L1 | : | 510 | 20.1 | Miscellaneous | : | 5.0 | 11 000 |
| | L2 | : | 2 530 | 99.6 | | | | |
| MV equipment located | L3 | : | 2 530 | 99.6 | **TOTAL** | : | 102.4 | 225 600 |
| inside the generator | L4 | : | 1 782 | 70.2 | | | | |
| | R | | 11 300 | 444.9 | | | | |

| APPROXIMATE INERTIA | | |
|---|---|---|
| **MR²** | **Kg.m²** | **Lb.ft²** |
| Generator | : 1 640 | 38 900 |

**Figure 9-15: Typical General Outline Arrangement for LDT Generator for Case 1 (90% Recovery)**

## 3. TURBINE GENERATOR ARRANGEMENT

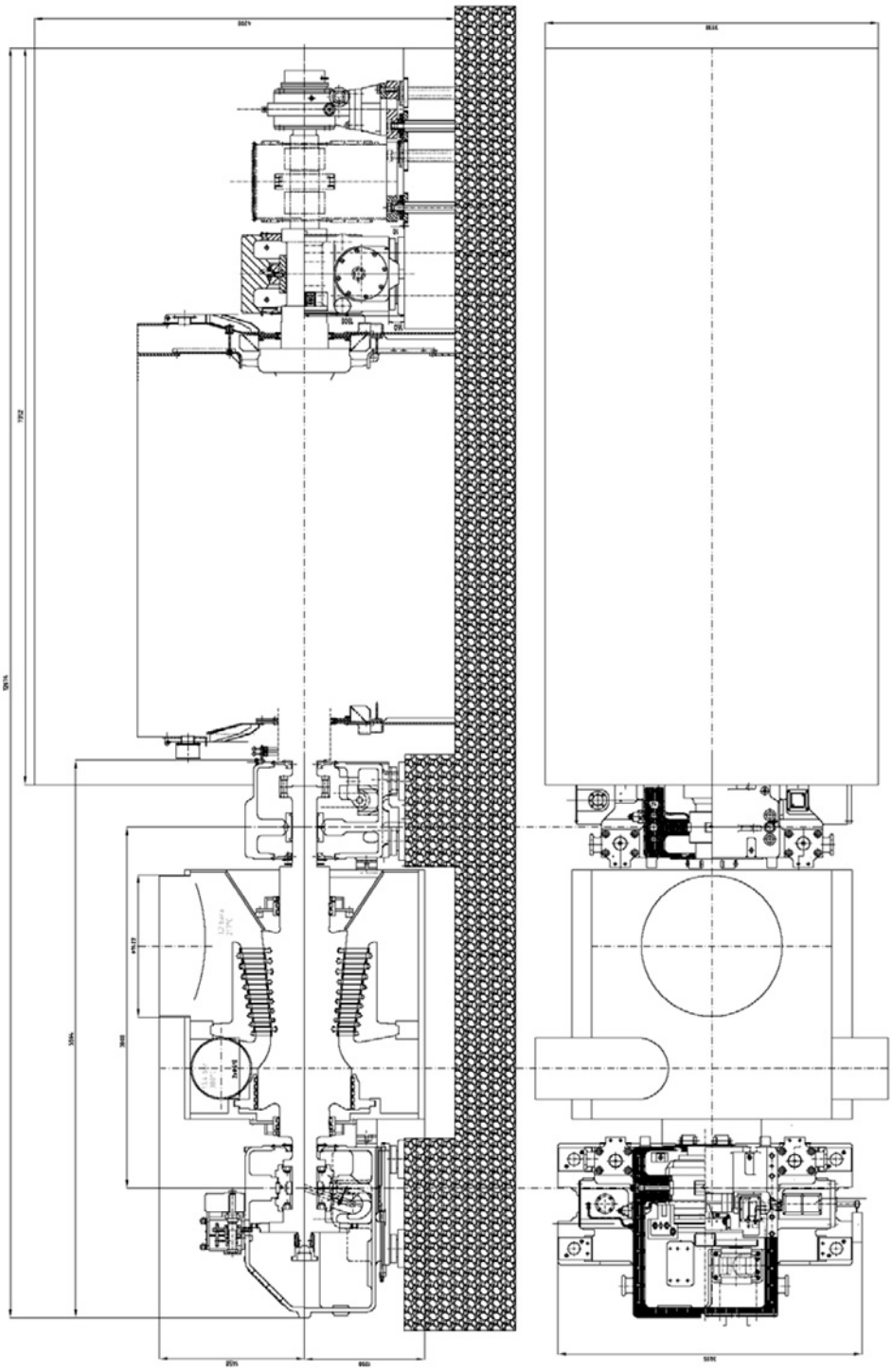

**Figure 9-16: Turbine Generator General Arrangement (Case 1: 90% removal)**

**Attachment C:**

**Steam Turbine and Auxiliaries for Case 4 Let Down Turbine (30% $CO_2$ removal)**

## 1. TECHNICAL DATA OF THE TURBINE

| Parameter | Unit | Value |
|---|---|---|
| Number of casings | - | 1 |
| Nominal speed<br>Plant cycle - | rpm<br>single flash | 3600 |
| Inlet pressure psia | 195 | |
| Temperature °F | 711 | |
| Exhaust pressure Gross Electric Power Output | psia | 47 |
| (at generator terminals) | kW | 15054 |

## 2. GENERATOR

The generator is an air-cooled generator running at 3,600 rpm. It is designed for a nominal active power of 15.00 MW at a power factor of 0.9. A general arrangement drawing is shown in Figure 9-17.

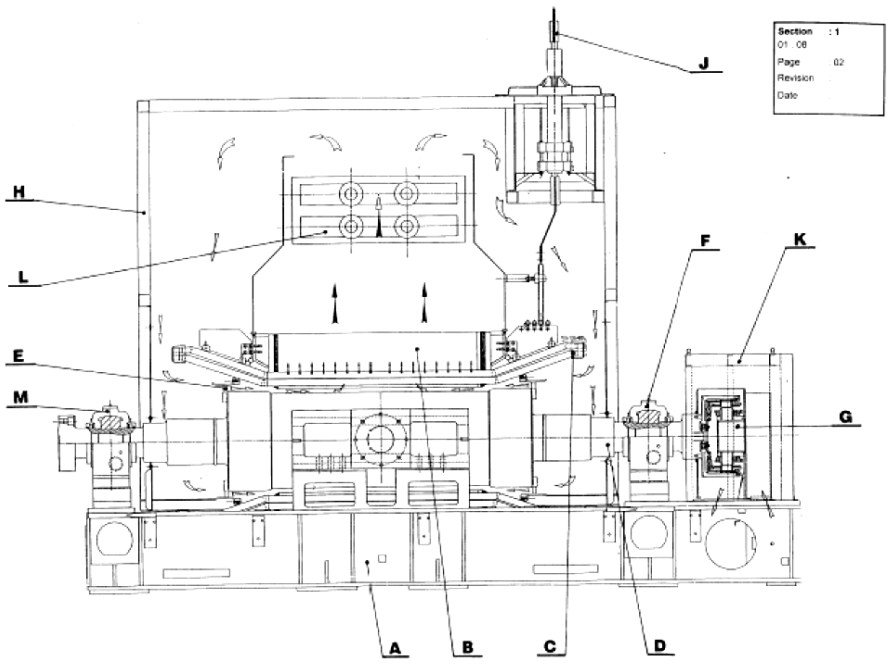


| | |
|---|---|
| A | Base |
| B | Magnetic core |
| C | Stator winding |
| D | Rotor |
| E | Fan |
| F | Bearing (N.E.D.) |
| G | Exciter |
| H | Noise hood |
| J | High voltage terminal |
| K | Exciter cover |
| L | Coolers |
| M | Bearing (N.E.D.) |

**Figure 9- 17: Typical General Outline Arrangement for LDT Generator for Case 4 (30% Recovery)**

| Main Features | Approximate Weights | | | |
|---|---|---|---|---|
| | | | Tons | Lbm |
| Water /air cooled | Stator | : | 26.4 | 58 202 |
| | Support base | | 9.4 | 20 723 |
| Brushless exciter | Rotor + Exciter Rotor | : | 11.5 | 25 353 |
| | Exciter | | 0.4 | 882 |
| Soundproof housing | Bearings | : | 1.3 | 2 866 |
| | Housing | | 6.0 | 15 212 |
| Protection degree IP 55 | Coolers | : | 1.6 | 3 527 |
| | Miscellaneous | | 2.6 | 5 732 |
| MV equipment located inside the generator | TOTAL | : | 60.1 | 132 498 |

## 3. TURBINE GENERATOR ARRANGEMENT

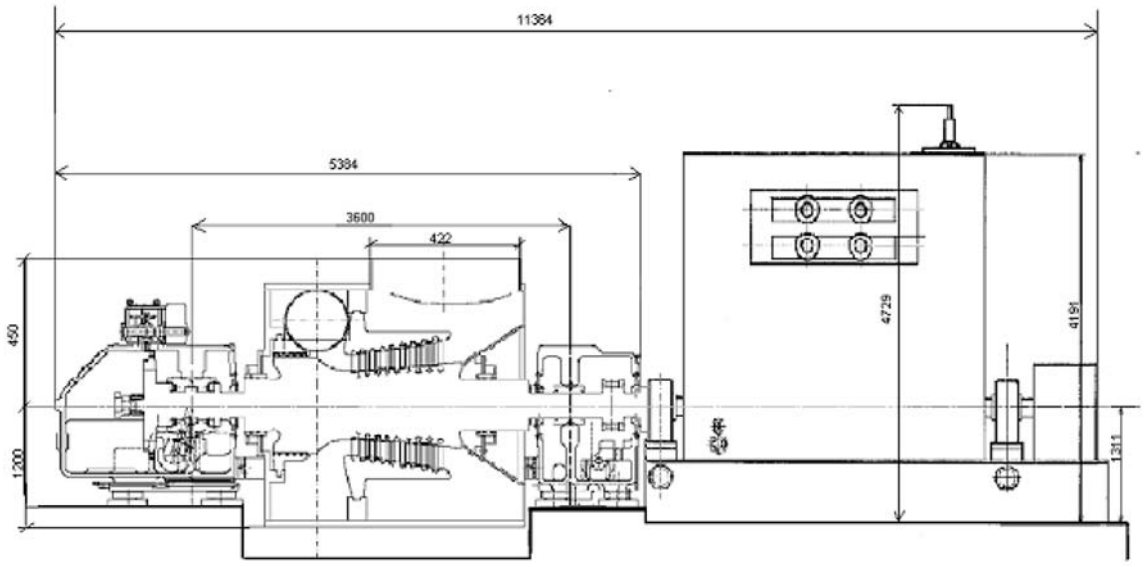


**Figure 9-18: Turbine Generator General Arrangement for Case 4 (30% removal)**