Japan CCS Forum 2019

Toshiba's Activity in Ministry of the Environment Sustainable CCS Project

TOSHIBA

Toshiba Energy Systems & Solutions Corporation

Hideo Kitamura

2019.06.12

© 2019 Toshiba Energy Systems & Solutions Corporation

Contents

© 2019 Toshiba Energy Systems & Solutions Corporation

01

Background

© 2019 Toshiba Energy Systems & Solutions Corporation

Business Domain of Toshiba Energy Systems & Solutions

Power Generation Systems

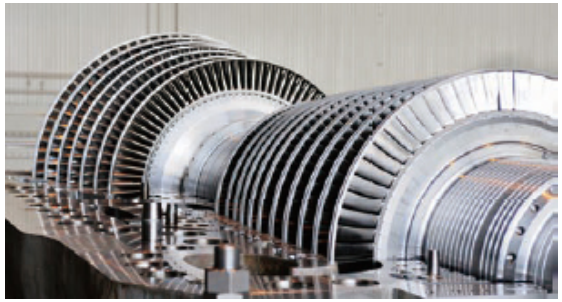

Thermal Power

Nuclear Power

Transmission and Distribution / Energy Storage

Transformer

Supervisory Control And Data Acquisition Systems (SCADA)

Hydrogen-based Autonomous Energy Supply System

Stationary Battery Energy Storage Systems

Renewable Energy

Hydro Power

Geothermal Power

Solar Power

© 2019 Toshiba Energy Systems & Solutions Corporation

What is CCS ?

CCS : Carbon (Dioxide) Capture and Storage

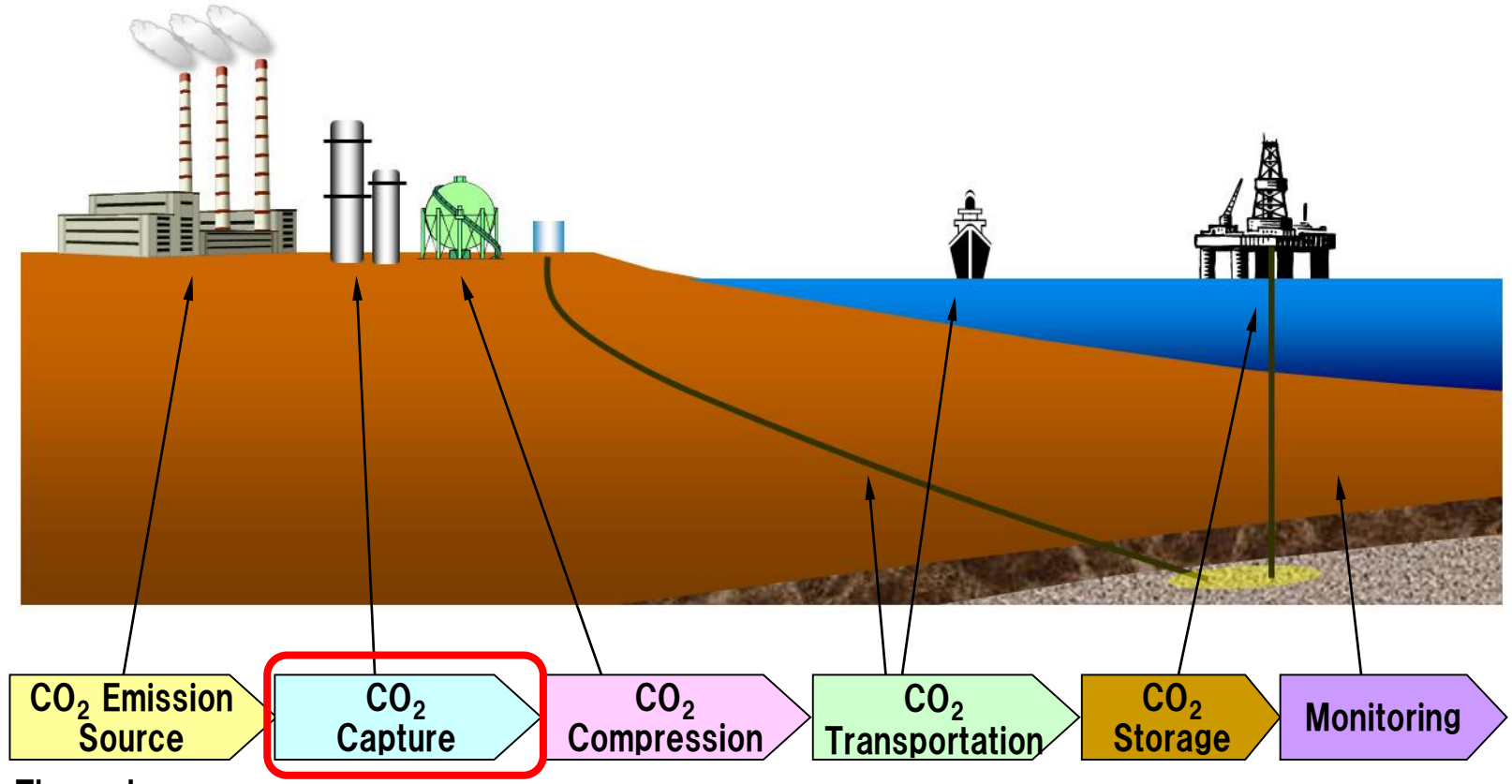

- Thermal power
- Industry
  (Steel, Cement, etc.)

© 2019 Toshiba Energy Systems & Solutions Corporation

CCS's role in the 2DS Pathway

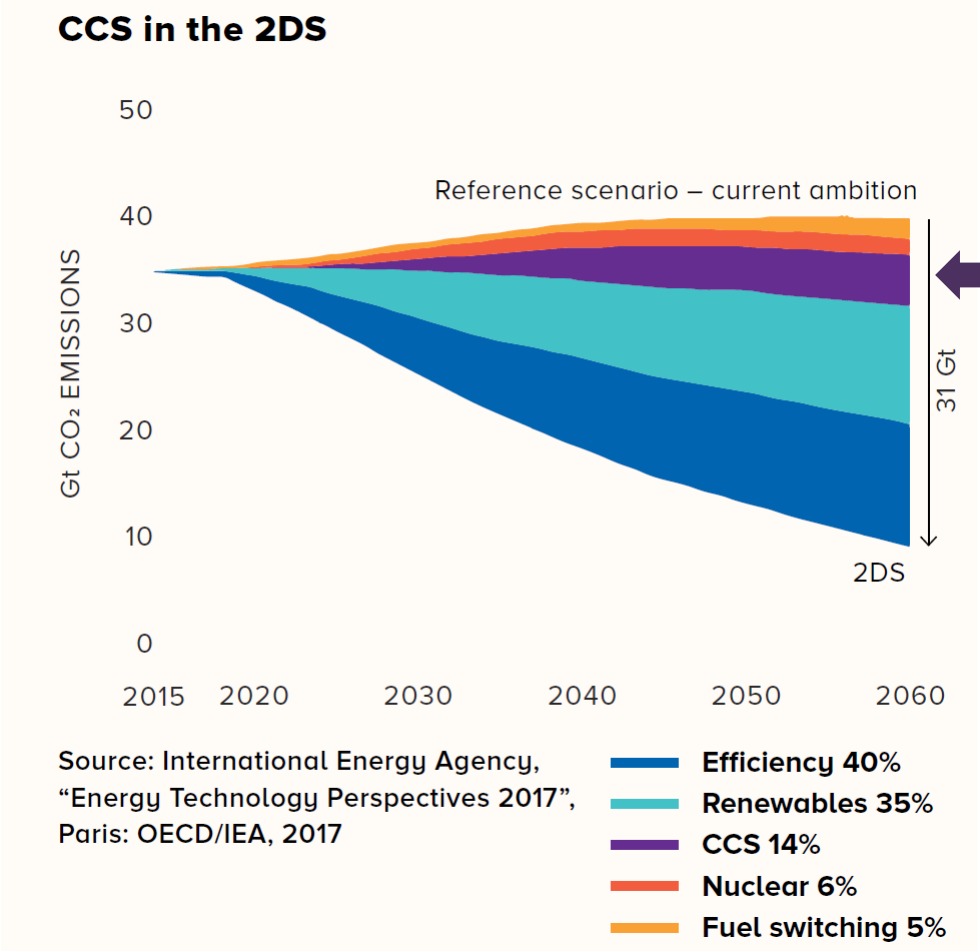

CCS

Source: The Global Status of CCS 2017 – P.20
https://www.globalccsinstitute.com/wp-content/uploads/2018/12/2017-Global-Status-Report.pdf

As a method to mitigate global warming, the necessity of CCS is recognized as a countermeasure against emission of CO_2.

© 2019 Toshiba Energy Systems & Solutions Corporation

02

Application of CO_2 Capture to Thermal Power Plants

© 2019 Toshiba Energy Systems & Solutions Corporation

CO_2 Capture Technology from Thermal Power Plants

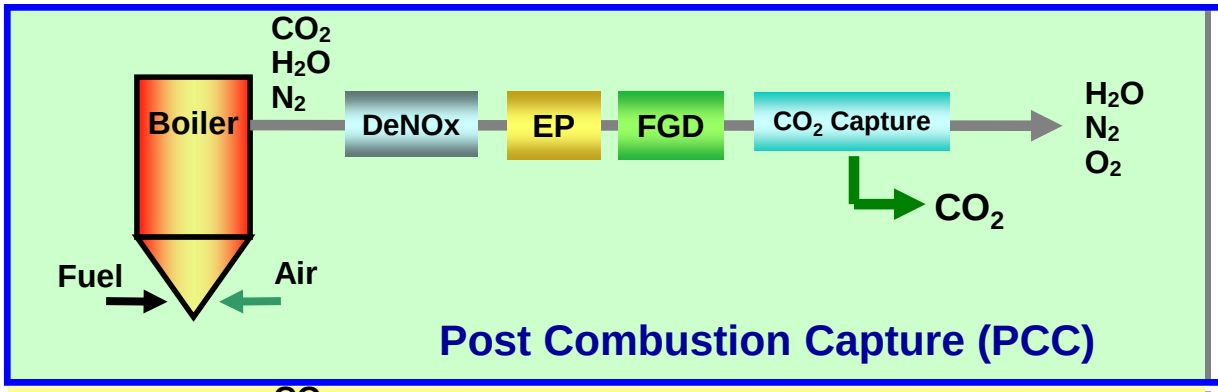

PROS:
- Process proven in chemical industry
- Adaptable to new build, existing retros
- Adaptable to other emitters (steel, cement)
- Partial capture configuration possible

CONS:
- Energy penalty for capture
- Equipments tend to be larger than other techs

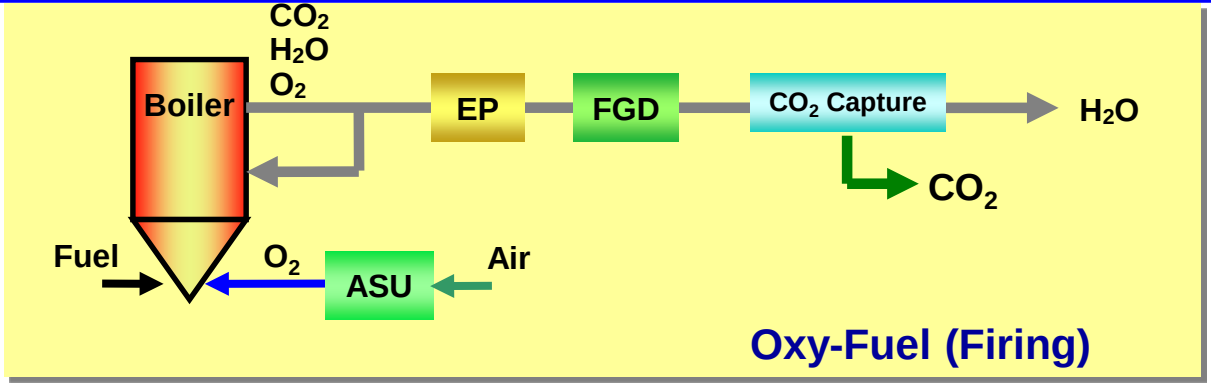

PROS:
- Capture process after boiler simplified
- Little penalty associated with capture itself

CONS:
- Energy penalty and cost required for ASU
- Plant operational flexibility
- Additional equip required for CO2 purity
- No partial capture configuration possible

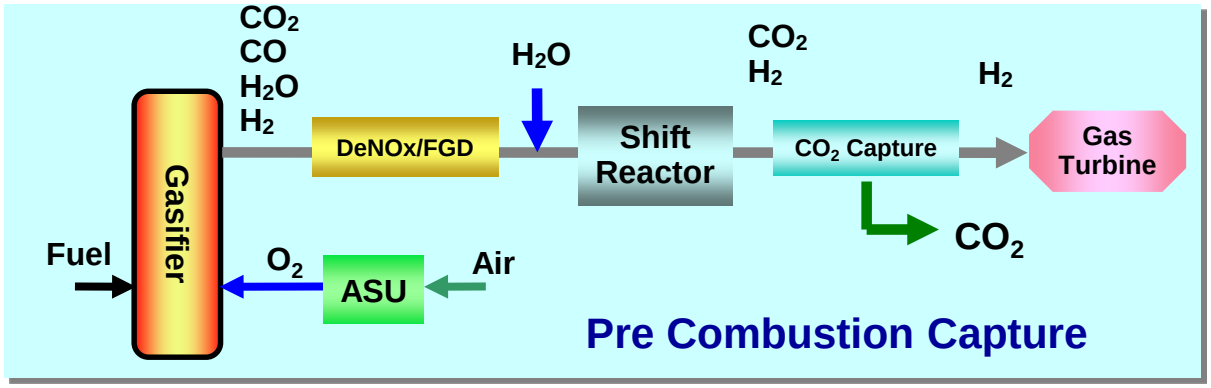

PROS:
- Capture equipments smaller (high pressure)
- Capture energy penalty smaller

CONS:
- Energy penalty and cost required for ASU
- IGCC lacks operational flexibility of CC
- Only new build application
- No partial capture configuration possible

ASU: Air Separation Unit FGD: Fuel Gas Desulphurization EP: Electrostatic Precipitator

© 2019 Toshiba Energy Systems & Solutions Corporation

CO_2 Capture System and Characteristic of Amine Solvent

To capture CO_2 in the flue gas continuously, amine solvent is used which absorbs CO_2 at low temperature and discharges at high temperature.

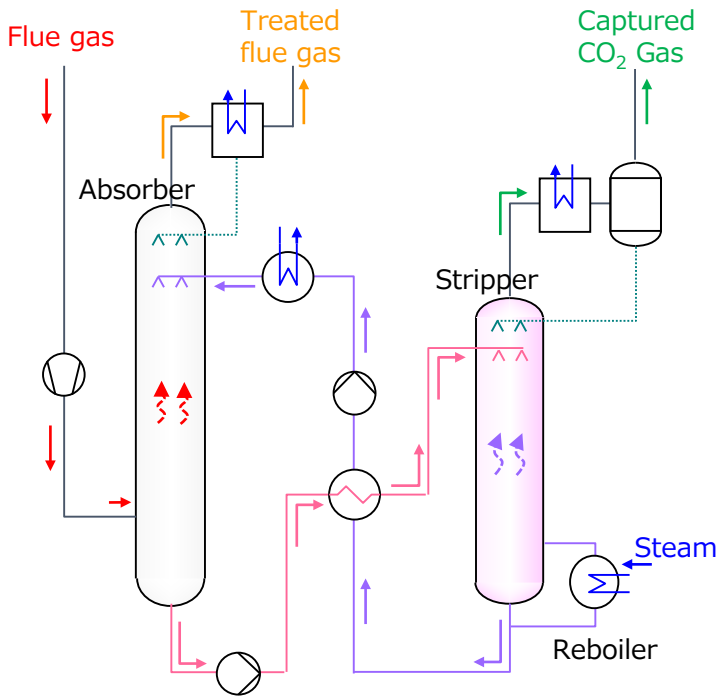

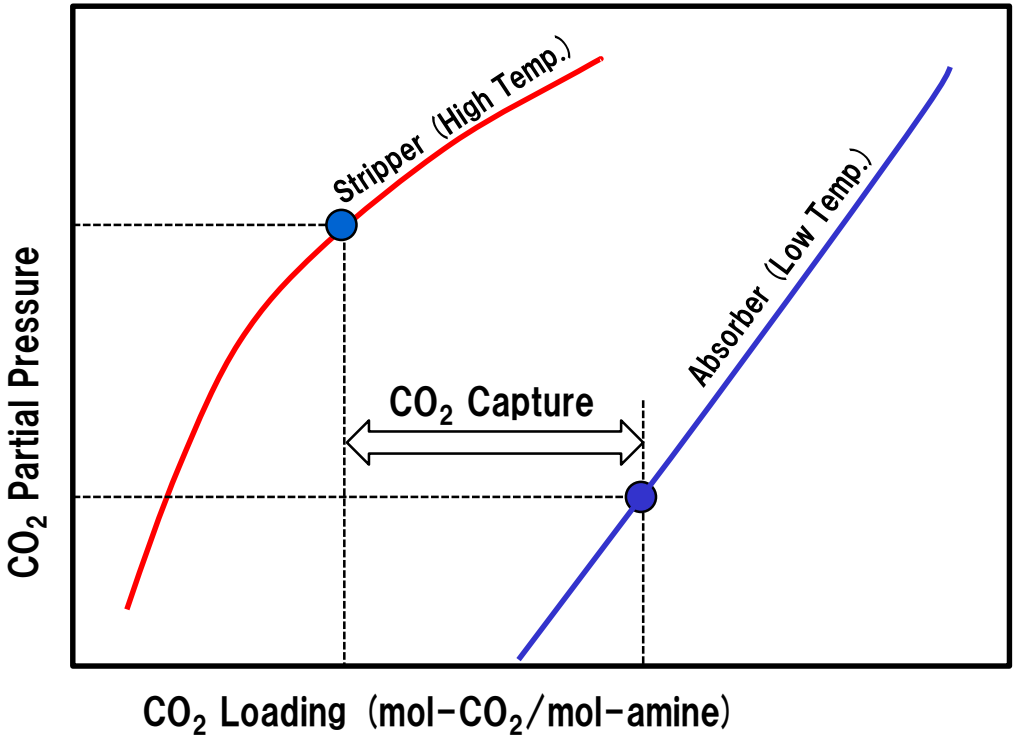

© 2019 Toshiba Energy Systems & Solutions Corporation

Reducing CO_2 Emission from Thermal Power Plants

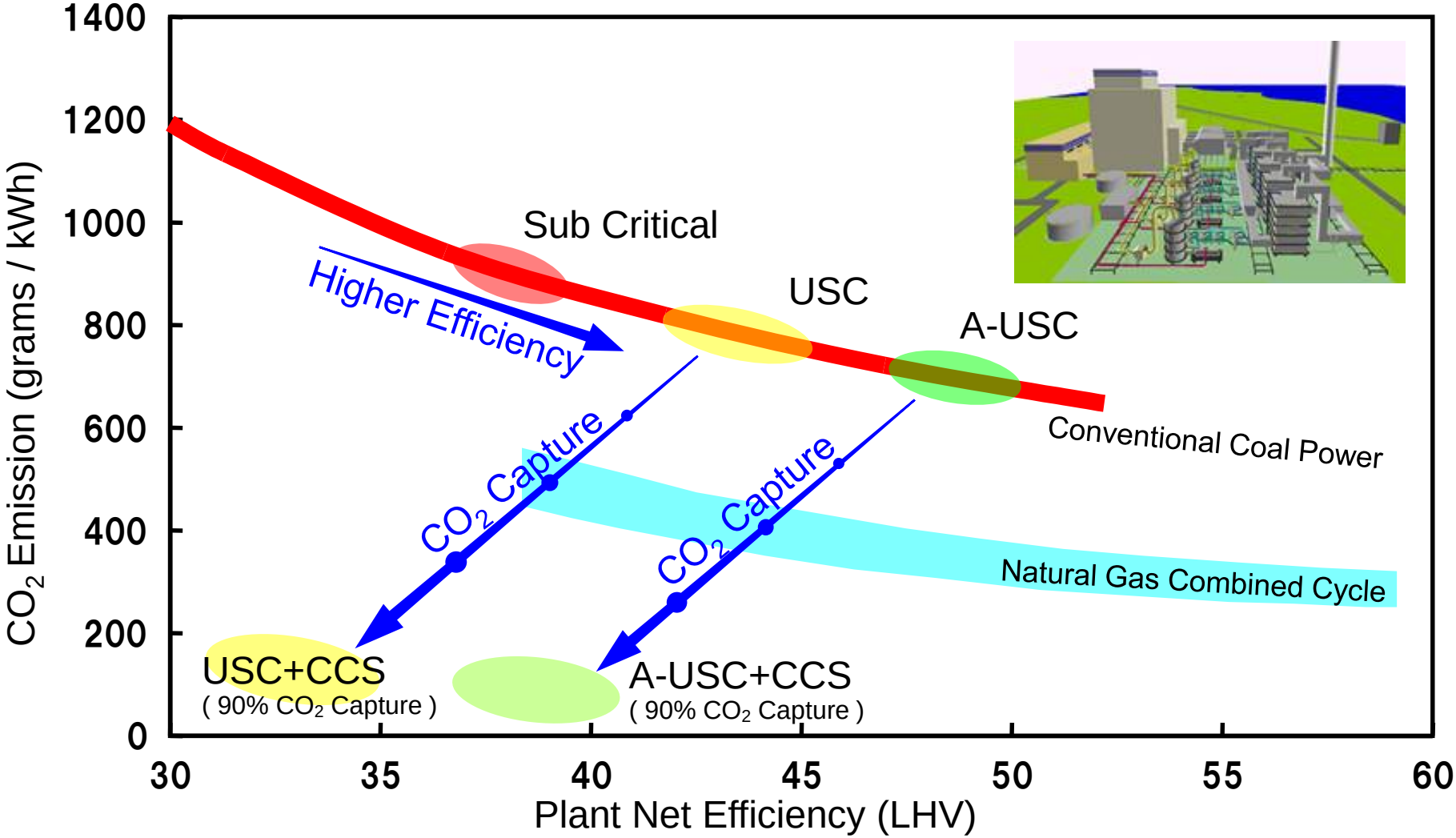

Substantial CO_2 reduction is realized by Integration and Optimization of both High efficiency Turbine Cycles and CCS technology

© 2019 Toshiba Energy Systems & Solutions Corporation

Integrating CO_2 Capture to Thermal Power Plants

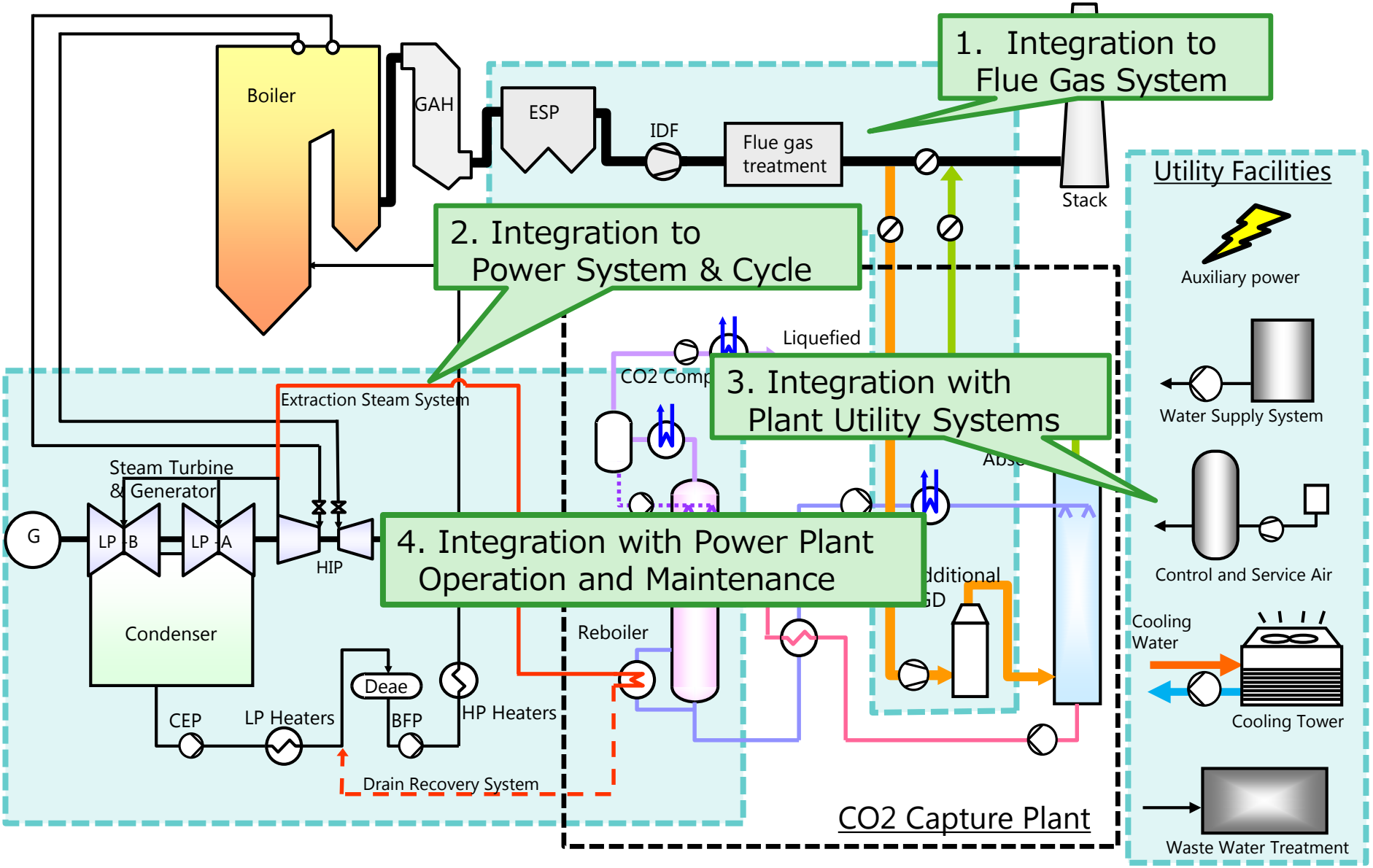

© 2019 Toshiba Energy Systems & Solutions Corporation

【Toshiba's Activity】

CO_2 Capture to Technology Implementation Flow

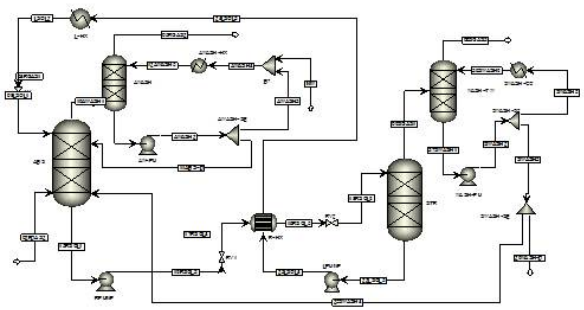

Process Design / Evaluation of System Performance Improvement by Simulation

Overall Demonstration at Mikawa PCC Pilot Plant

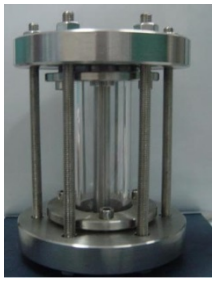

Design of Solvent / Evaluation of Basic Properties and Absorption Performance

Performance / Degradation Evaluation by Small Loop

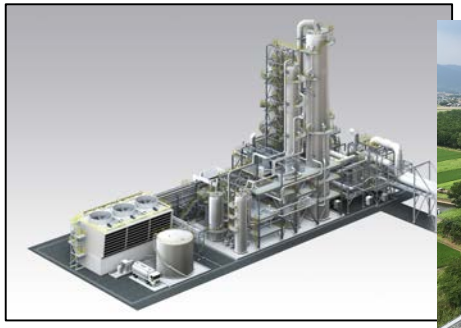

Large Scale Demonstration / Commercial Plant

© 2019 Toshiba Energy Systems & Solutions Corporation

Mikawa Thermal Power Plant

CO_2 Capture Demonstration Plant

Constructed under the Ministry of the Environment Project

Sigma Power Ariake Co., Ltd.
Mikawa Power Plant
Omuta City, Fukuoka, Japan

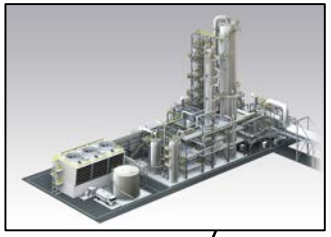

PCC Pilot Plant

Toshiba owned

Turbine No.2

Full Size Steam Turbine Test Facility

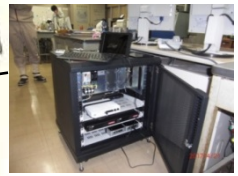

IoT Server

Data Collection & Remote monitoring

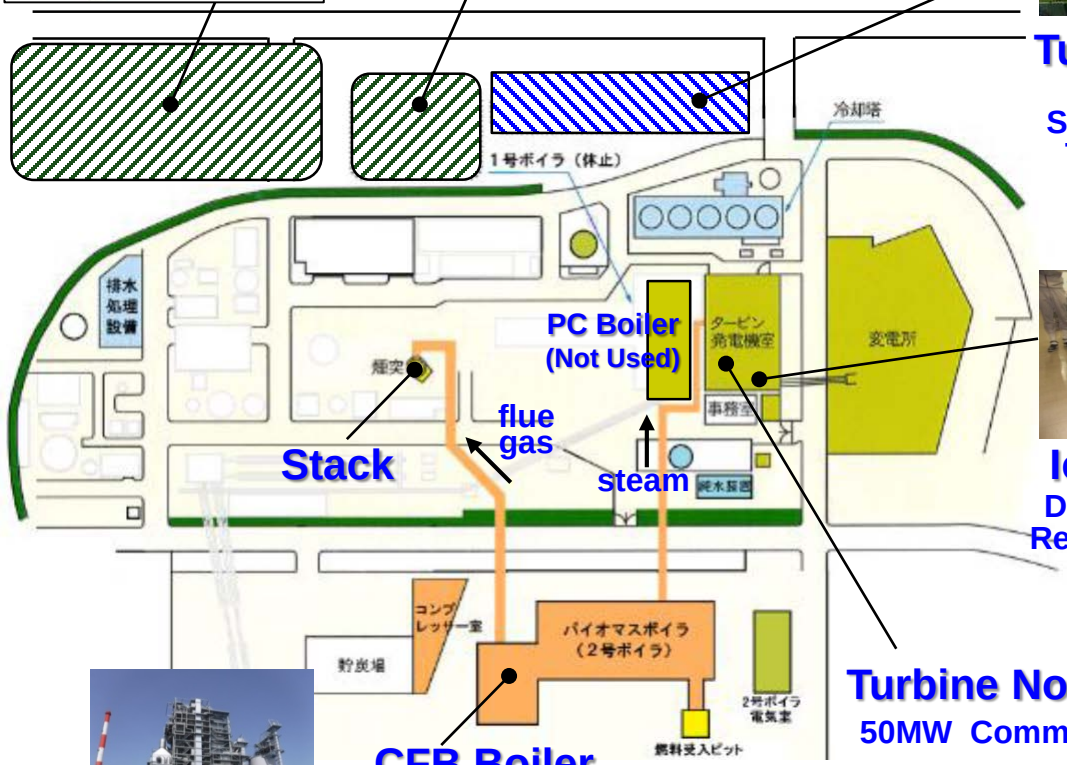

© 2019 Toshiba Energy Systems & Solutions Corporation

Mikawa PCC Pilot Plant - Overview and Summary

Plant Outline

Location:	Omuta City, Fukuoka Inside Mikawa Thermal Power Plant (Property of SIGMA POWER Ariake Co.Ltd.)
Plant Commenced:	September 29, 2009
Carbon Capture Technology:	Post Combustion Capture (PCC) Amine-based Chemical Absorption (Toshiba's Solvent System)
Capture Capacity:	10 ton-CO_2 / day
Flue Gas Flow:	2100 Nm^3 / hour (from Mikawa Biomass/Coal Fired Power Plant) * Test flue gas CO_2 concentration adjustable from 4%(NGCC) to 30%(Steel works) utilizing absorber and stripper exit gas recirculation and air bypass intake line.

Summary of Results (as of May, 2019)

- Cumulative 11794 hours of operation on a live flue gas of biomass / coal fired thermal power plant
- CO2 Recovery Energy: less than 2.4 GJ/ t-CO_2 (@90% CO_2 Capture, CO_2 Conc. approx. 12%)
- Verified system stability over 2800 hours of continuous operation.

Reference Website

https://www.toshiba-energy.com/en/thermal/product/zero-emissions.htm

© 2019 Toshiba Energy Systems & Solutions Corporation

03

Ministry of the Environment Sustainable CCS Project (CO_2 Capture)

© 2019 Toshiba Energy Systems & Solutions Corporation

Ministry of the Environment Sustainable CCS Project

Outline of the Project

(1) CO_2 Capture from the Mikawa Power Plant

- CO_2 capture facility to be designed and constructed to capture more than 500 tons of CO_2 per day. (500 tons of CO_2 per day is about 50% of the daily emissions from the 50 MW Mikawa Power Plant)
- The plant will be used to evaluate performance of technology under various operating conditions, cost and environmental aspects of the amine-based post-combustion chemical absorption technology.

(2) Establishing a Socio-political Environment for the Introduction of CCS in Japan

- Research on aspects including socio-economics and policies to establish an enabling environment necessary for the smooth introduction of CCS in Japan.
- Develop basic concepts toward an integrated CCS system, with aims to achieve practical applications of the capture technology by 2020.

Project Consortium (as of Mar 2019)

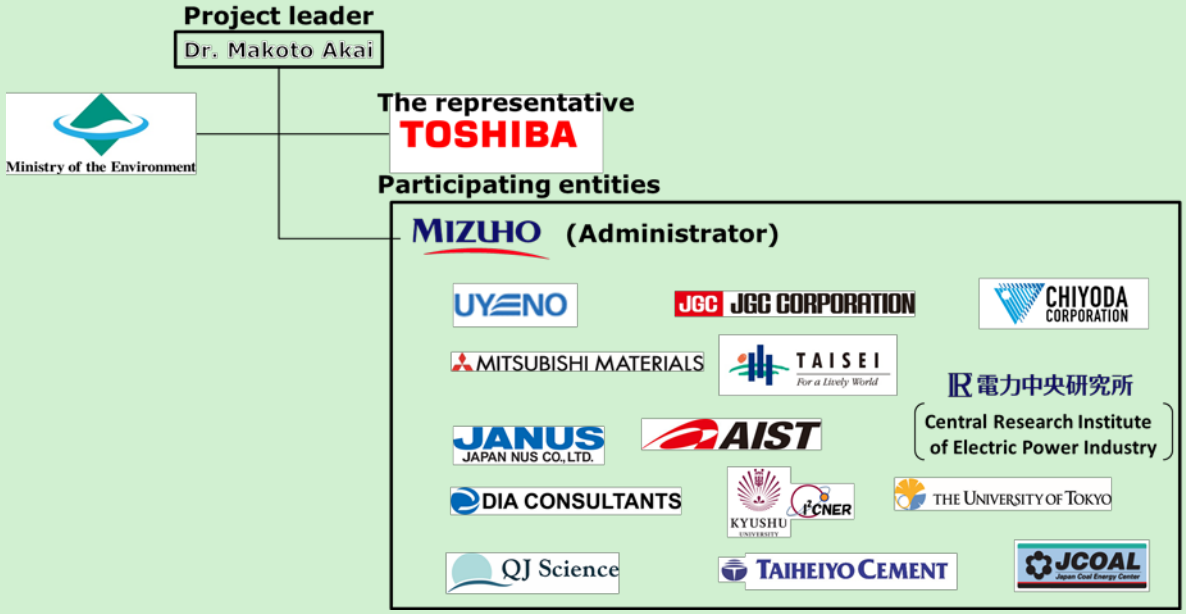

© 2019 Toshiba Energy Systems & Solutions Corporation

CO_2 Capture Demonstration Plant (1)

Plant Outline

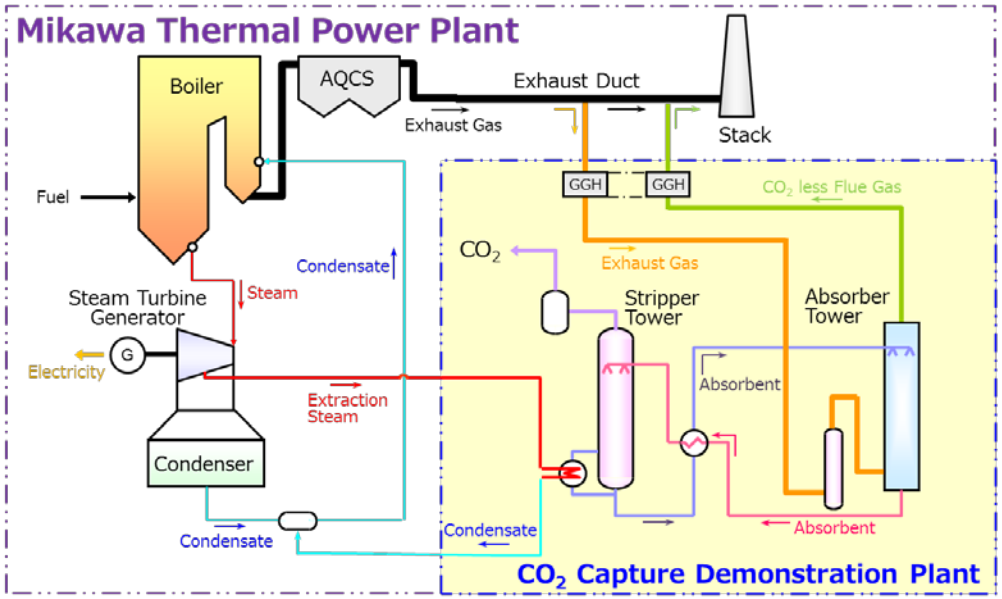

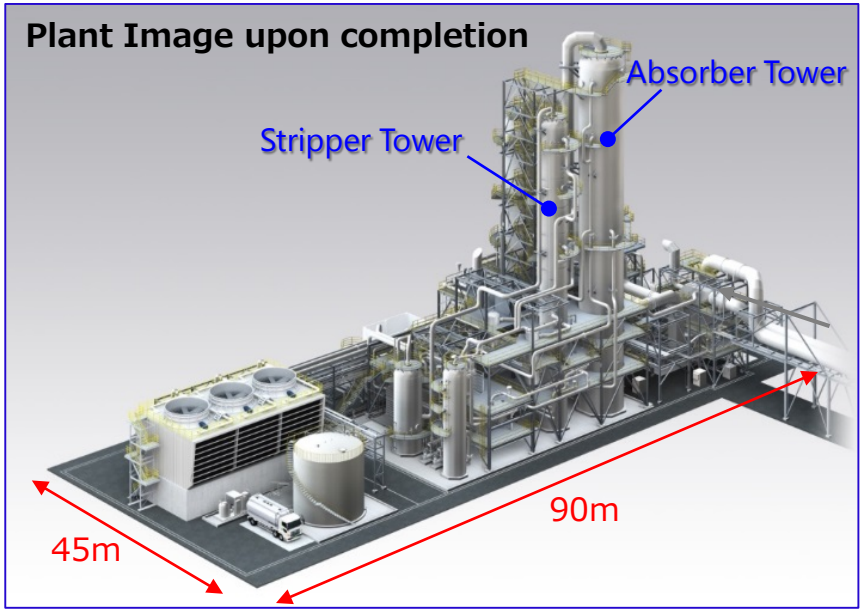

Plant Features

- As part of the MoE's Sustainable CCS Project, Toshiba has designed and now constructing the CO_2 Capture Demonstration Plant, which will capture more than 500 tons-CO_2/day from Mikawa Power Plant (more than 50% of its total emissions)
- The Capture Plant will be built and fully integrated with the Power Plant, with turbine extraction steam feeding the energy for regeneration of CO_2 at the stripper tower.
- The Mikawa Power Plant now has a new boiler capable of burning 100% biomass. Consequently, the project has the potential to be one of the first BECCS project in the world.

© 2019 Toshiba Energy Systems & Solutions Corporation

CO_2 Capture Demonstration Plant (2)

Schedule of 5-year Project

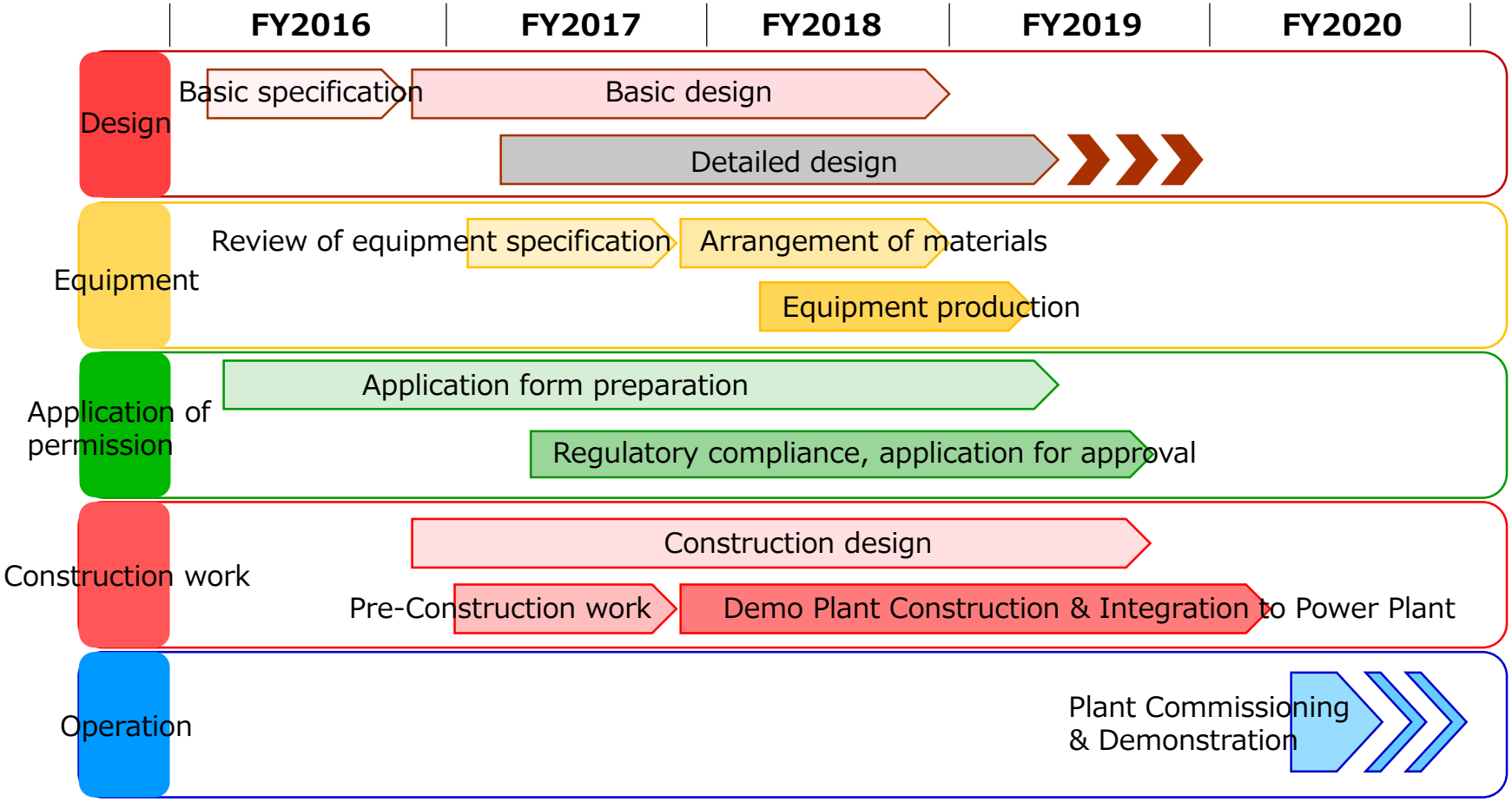

© 2019 Toshiba Energy Systems & Solutions Corporation

CO_2 Capture Demonstration Plant (3)

Status of Construction Site

Present Status

© 2019 Toshiba Energy Systems & Solutions Corporation

CO_2 Capture Demonstration Plant (4)

Contents of Demonstration

The following are presently considered as items to be demonstrated/verified at the CO_2 Capture Demo Plant*:

- ◆ Performance Issues
  - CO_2 Capture mass flow
  - CO_2 Capture rate
  - Energy required to capture CO_2
  - Overall effect on performance of the power plant equipped with CO_2 capture facility
- ◆ Operability Issues
  - Effects of flue gas property (fuel)
  - Effects of CO_2 capture rate setting
  - Effects of heat inputs to CO_2 capture
  - Start-up, shut-down, transient operations
  - Part load, part capture operability
- ◆ Environmental Issues
  - Emissions for CO_2 capture facility
  - Control methods of emissions
  - Degradation and its effects

Note：Depth and extent of evaluation is subject to limitation of available time, schedule, and budget

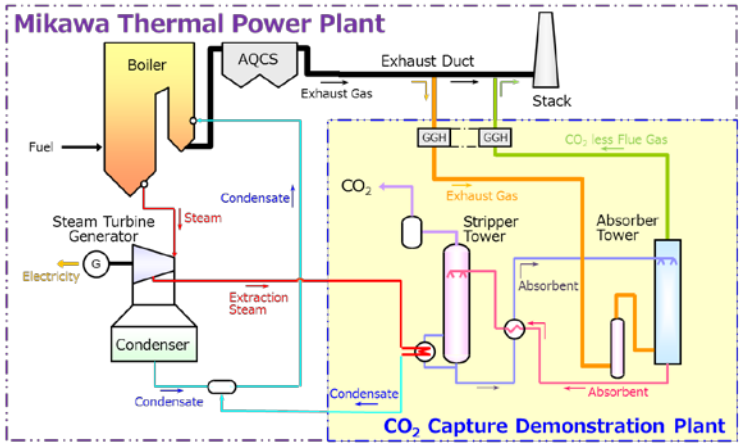

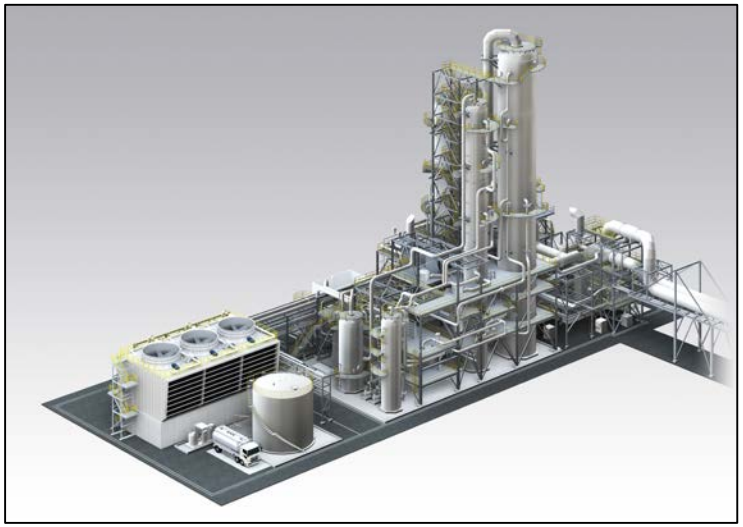

© 2019 Toshiba Energy Systems & Solutions Corporation

TOSHIBA

Thank you for your attention !

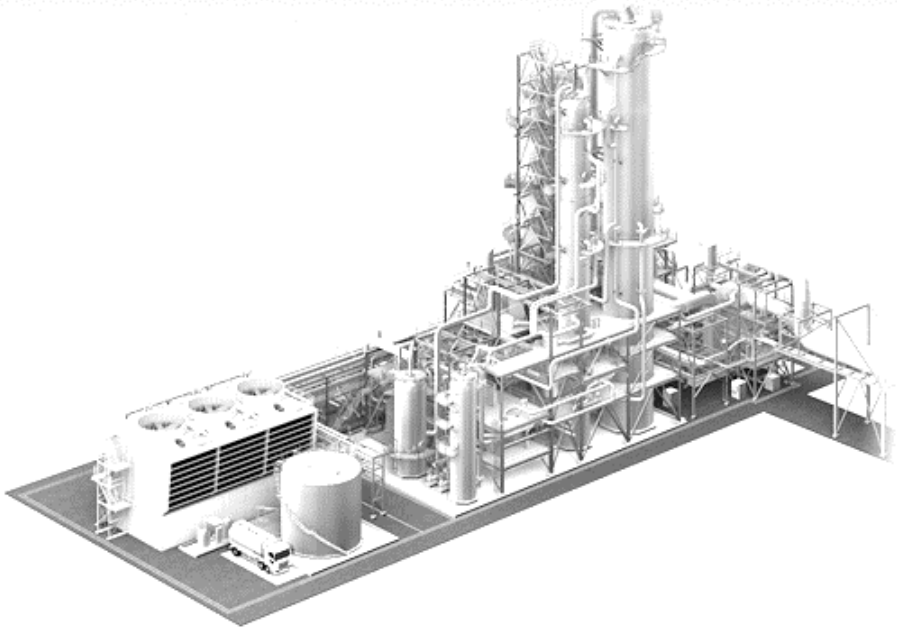

Next :

Ministry of the Environment
Sustainable CCS Project
(Transport)

© 2019 Toshiba Energy Systems & Solutions Corporation