NET POWER

Truly Clean, Cheaper Energy

NET POWER HAS SIGNIFICANT IMPACT

TO GET TO NET ZERO, THE WORLD MUST

- **RETROFIT**
- **REPLACE OR**
- **OFFSET**

$3 TO $6 BILLION OF EQUIPMENT EVERY DAY FOR 30 YEARS TO 8 RIVERS TECHNOLOGY

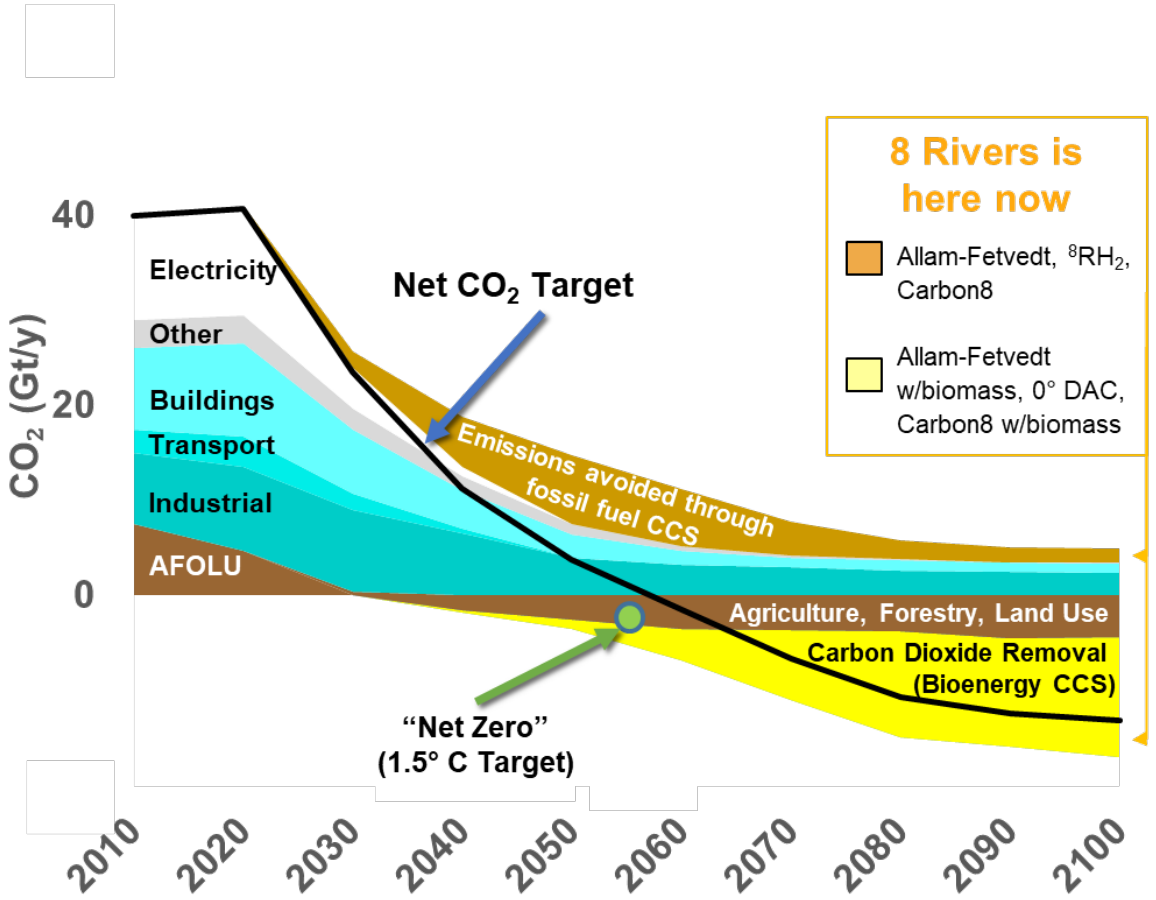

Emissions Scenario 2: *"A middle-of-the-road scenario in which societal as well as technological development follows historical patterns. Emissions reductions are mainly achieved by changing the way in which energy and products are produced, and to a lesser degree by reductions in demand." 2018: Mitigation Pathways Compatible with 1.5℃ in the Context of Sustainable Development. In: Global Warming of 1.5℃, p.113, fig. 2.5.*

LOW COST POWER, CO_2, AND SO MUCH MORE

Zero-emissions ammonia

Concrete

Plastics production

Zero-emissions LNG

Sour gas clean-up

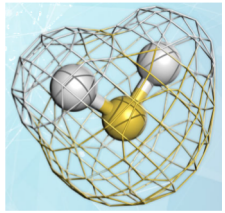

Emissions-free Hydrogen

Water treatment

Enhanced oil recovery

Methanol

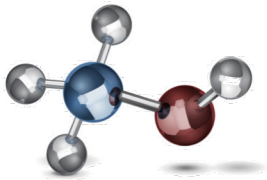

Carbon nanotubes

THANK YOU

APPENDIX

WORLD CLASS PARTNERS

NET POWER IS SUPPORTED BY STRONG PARTNERS WITH DEMONSTRATED EXPERTISE TO DRIVE COMMERCIALIZATION

8 RIVERS
- Inventor/developer (2010)
- Engineering/sales/marketing

TOSHIBA
Leading Innovation
- Key OEM partner (2011)
- Turbine design, testing and supply

MCDERMOTT
- Investor (2012)
- EPC and sales expertise

Exelon
- Investor (2014)
- Operations and owner input

OXY Oxy Low Carbon Ventures, LLC
A subsidiary of Occidental Petroleum Corporation
- Investor (2018)
- CO_2 and commissioning expertise

NET POWER IS CLEAN AND LOW COST (COOLED TURBINE)

THE LCOE FOR SEVERAL TECHNOLOGIES CAPABLE OF SUPPLYING **24HR, RELIABLE ENERGY** ARE SHOWN.

NET POWER HAS THE POTENTIAL TO PROVIDE THE LOWEST COST SOURCE OF CLEAN, FLEXIBLE, RELIABLE POWER.

BYPRODUCT SALES CAN FURTHER ENHANCE PROJECT ECONOMICS.

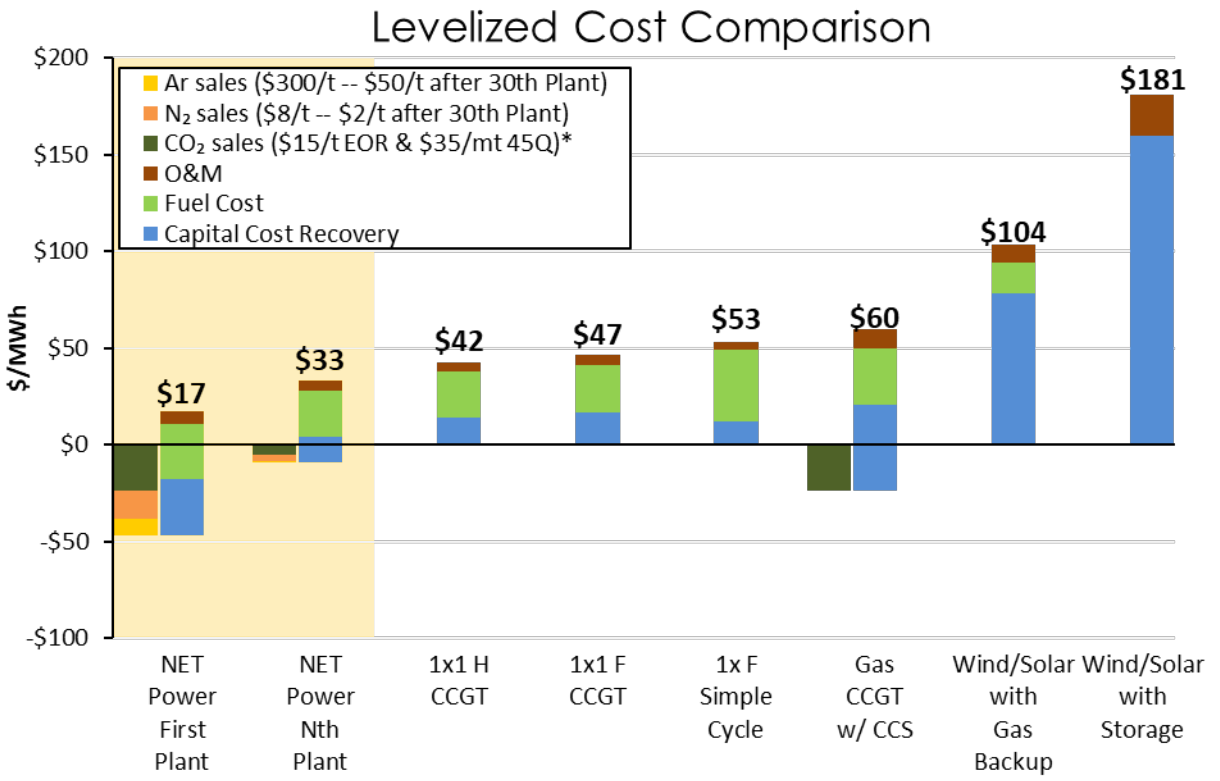

Source: Analysis by Lummus Consultants and 8 Rivers

*Based on recent 45Q tax incentives in the US for EOR. $35/metric tonne tax credit for EOR is converted to a pre-tax $/short ton basis to illustrate equivalent impact (assumes 0.907185 tonne/ton and 21% corporate tax).

Notes: Assumes $2.85/MMBTU natural gas in 2018, with annual escalation at 2%. All data for utility-scale projects. Capacity payments and other ancillary service revenue are not included in this analysis.

NET POWER IS ABOUT MORE THAN POWER

VALUE OF INDUSTRIAL GAS STREAM APPROACHES VALUE OF ELECTRICITY

45Q TAX CREDITS FOR CO_2 CAPTURE PROVIDE $35-50/TON FOR NET POWER'S CO_2.

Commodity pricing:

- Natural Gas - $2.85/MMBtu
- Oil - $70/bbls
- Electricity - $0.04/kWh
- Ar - $300/ton
- N_2 - $8/ton
- CO_2 - $15/ton
- CO_2 (45Q) - $40.19/ton
- (tax credit of $35 per metric tonne converted to short ton and grossed up at 21% rate to represent a pretax revenue stream)

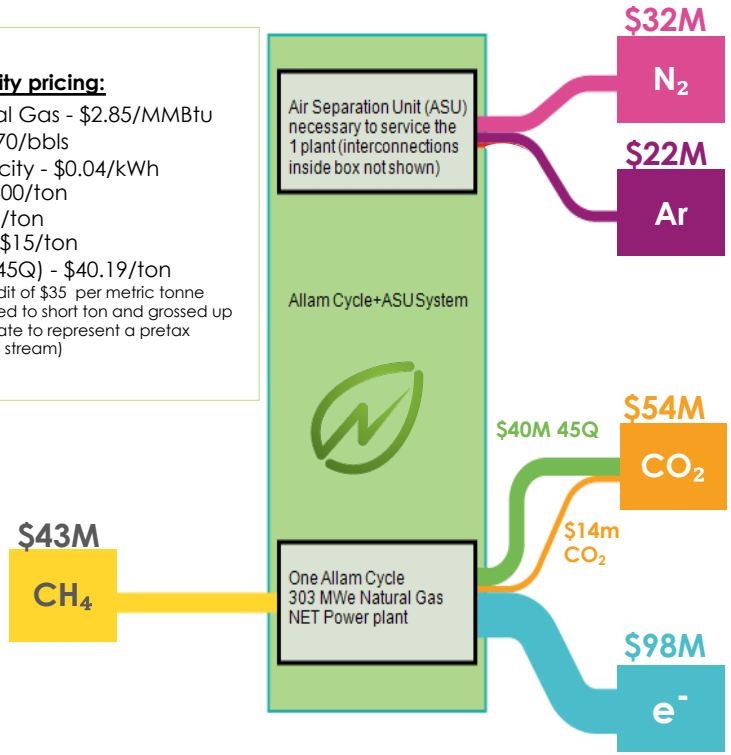

CO_2 CAN BE SEQUESTERED

ENHANCED OIL RECOVERY (EOR) USES CO_2 FOR THE PRODUCTION OF OIL, WHILE BEING NET CARBON NEUTRAL (~1 CARBON ATOMS SEQUESTERED FOR EVERY CARBON ATOM IN OIL)

CO_2 CAN ALSO BE SEQUESTERED IN IN DEEP SALINE FORMATIONS

IN THE US, 45Q PROVIDES FEDERAL TAX CREDIT OF $50/TONNE FOR SEQUESTRATION AND $35 FOR EOR

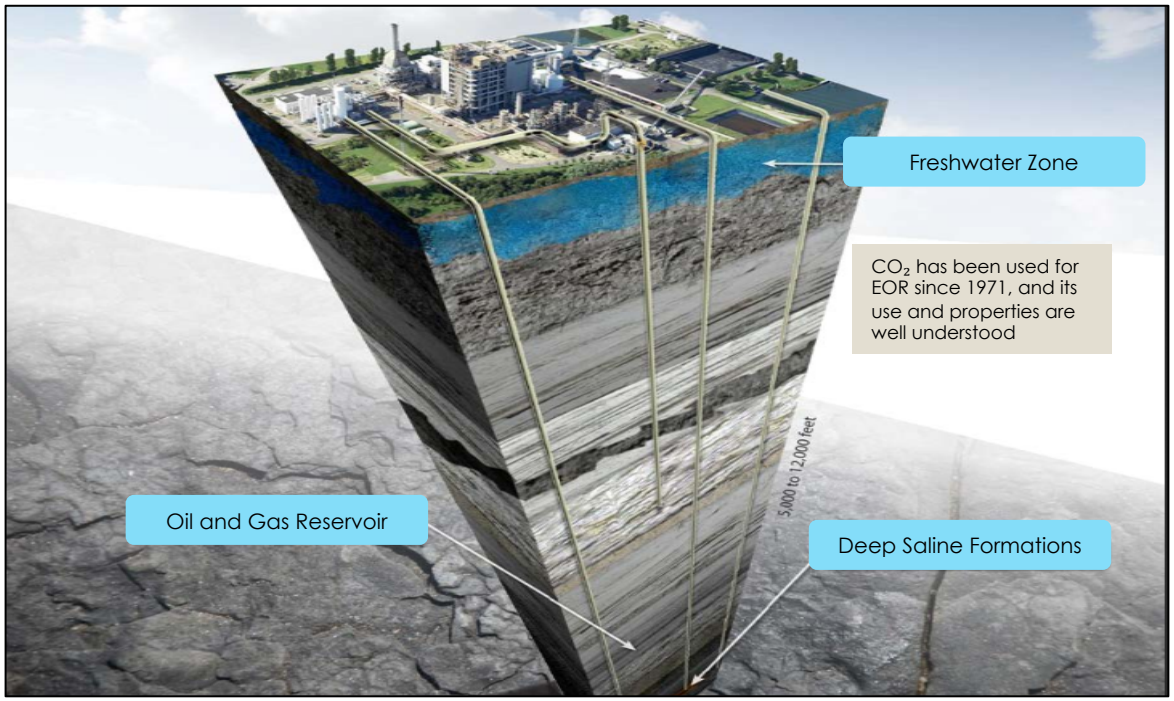

Locations with Acceptable Geology for CO_2 Sequestration

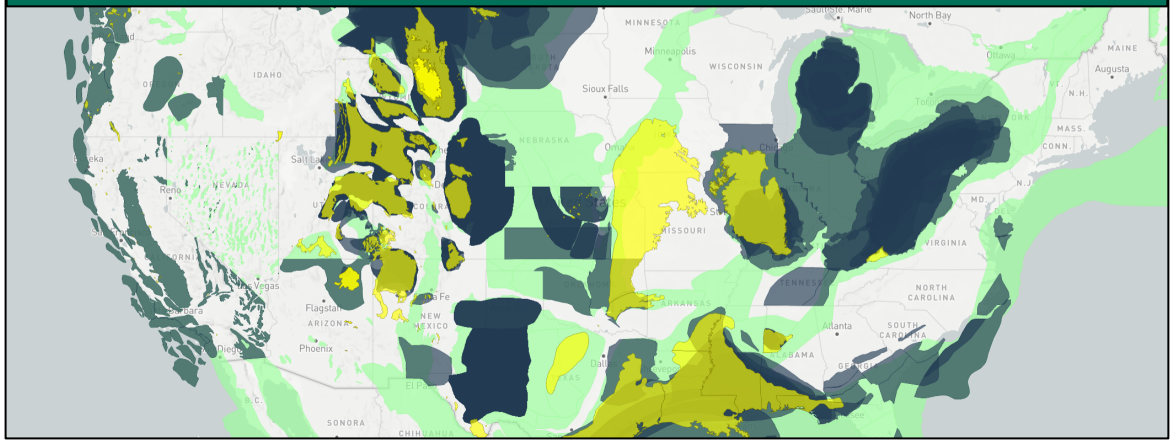

8RIVERS ENERGY ALLAM-FETVEDT CYCLE FOR BIO-MASS & BEYOND

COAL-BASED ALLAM-FETVEDT CYCLE USES SAME TECHNOLOGY AS NET POWER'S NATURAL GAS ALLAM-FETVEDT CYCLE

NETPOWER

(NATURAL GAS)

Efficiency Breakdown	
Gross Turbine Output	82%
Oxygen Production	-12%
Balance of Plant	-15%
Net Efficiency	55%

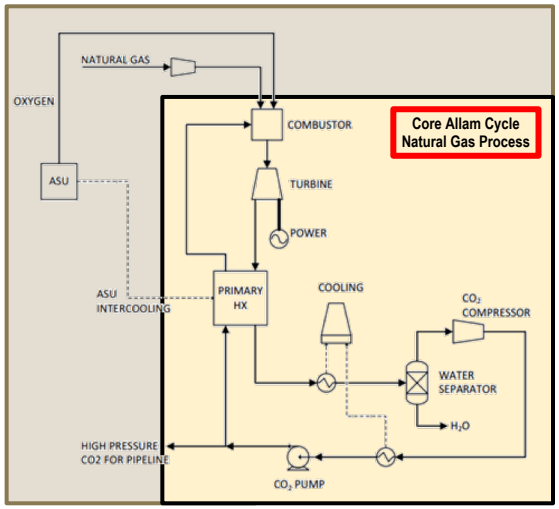

License for use with fossil fuels with an API gravity ≥ 18°

8RIVERS ENERGY

(BIO-MASS AND SOLID FUELS+)

Efficiency Breakdown	
Gross Turbine Output	71%
Oxygen Production	-10%
Balance of Plant	-16%
Net Efficiency	45%

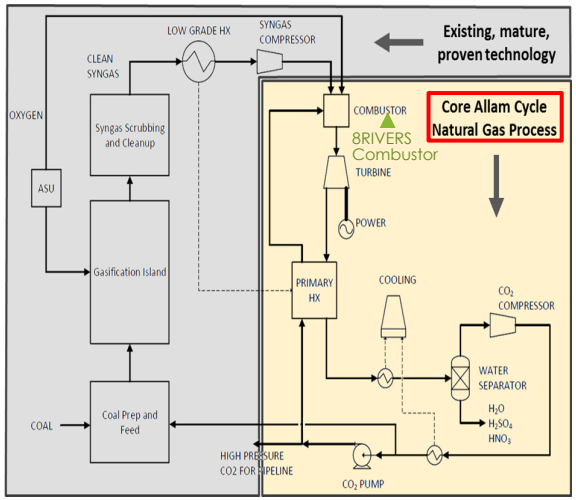

License for use with fossil fuels API gravity ≤ 18o API (and a viscosity of at least 10,000cP at 25oC 1atm)

NET POWER'S ALLAM-FETVEDT CYCLE DELIVERS

THE NET POWER TECHNOLOGY IS A PARADIGM SHIFT

A SYSTEM THAT IS ABLE TO MEET THE WORLD'S CLIMATE TARGETS WITHOUT PAYING MORE FOR ELECTRICITY.

- ELECTRICITY FROM NATURAL GAS FOR LESS THAN A COMBINED CYCLE PLANT
- ENVIRONMENTAL BENEFITS
  - NO **NOX OR SOX** EMISSIONS.
  - **CAPTURES OR ELIMINATES** SUBSTANTIALLY ALL OF THE CARBON AND NON-CARBON ATMOSPHERIC EMISSIONS **WITHOUT ADDITIONAL COST**
  - DOES **NOT REQUIRE WATER** (AT A SMALL REDUCTION IN EFFICIENCY)
- ADDITIONAL CASH FLOW VALUE STREAMS
  - CAPTURED CO_2
  - IN THE US, 45Q TAX CREDITS
    - PER 300MW TURBINE ~$430M TOTAL/~$300M PV
  - INDUSTRIAL GASES SUCH AS N_2 AND AR
- ECONOMICS
  - DEMONSTRATES **SUPERIOR TOTAL ECONOMIC ADVANTAGE** TO EXISTING NATURAL GAS POWER PLANTS
  - CAN USE **INEXPENSIVE FUELS** SUCH AS ACID GAS, SOUR GAS, ASSOCIATED GAS, AND PRODUCED GAS
  - PRODUCES **VALUABLE GASES**, INCLUDING CO_2, N_2, O_2 AND AR
  - CAN PROVIDE CO_2 FOR **EOR AND SOUR GAS CLEAN-UP**

ALLAM-FETVEDT CYCLE NATURAL GAS PLATFORM

OXY-FUEL, SEMI-CLOSED-LOOP, WITH A CO_2 WORKING FLUID.

55 TO 59% (LHV) NET EFFICIENCY (CAN BE ADJUSTED), WITH CAPTURE OF >97% OF CO_2.

CO_2 AND WATER ARE THE ONLY EFFLUENTS. ASU ALSO PRODUCES SALEABLE BYPRODUCTS.

A NEAR-TERM CO_2 SOLUTION THAT UTILIZES MOSTLY EXISTING EQUIPMENT IN A NOVEL WAY.

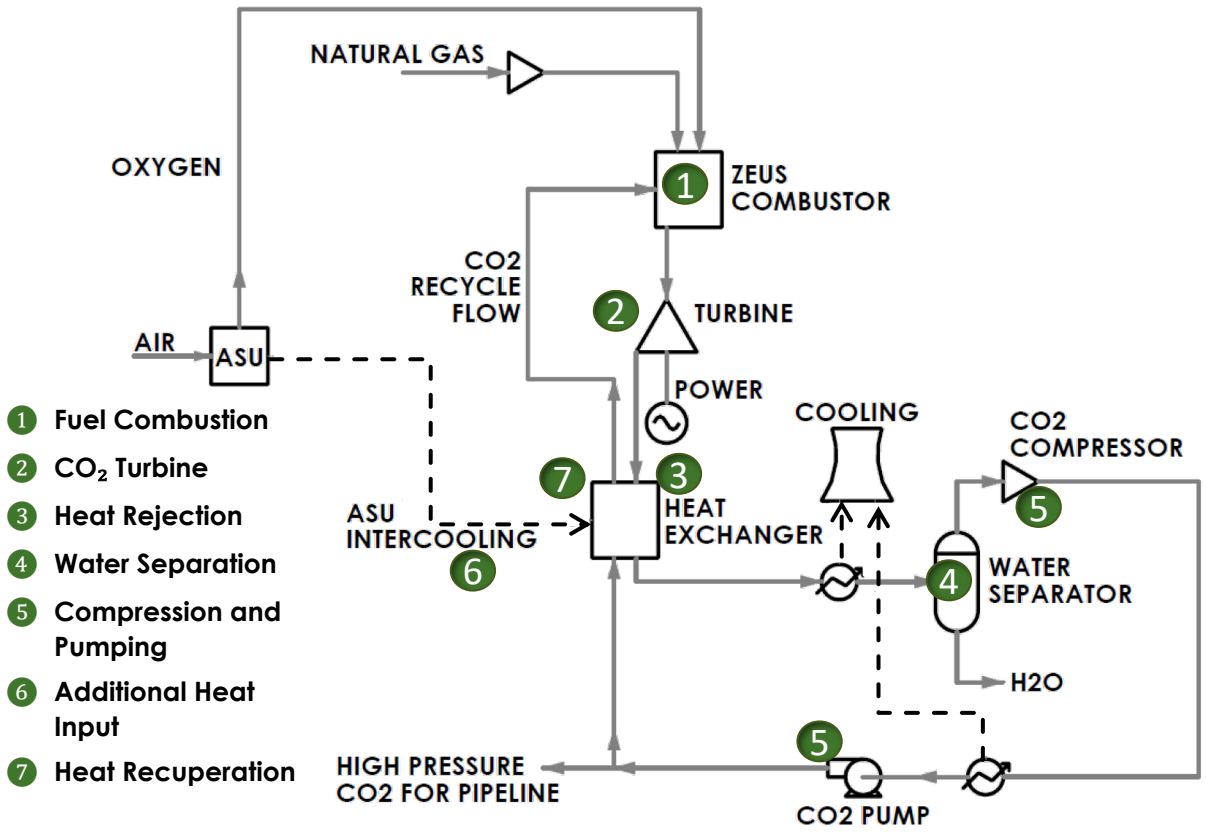

THE ALLAM-FETVEDT CYCLE IS A DIFFERENT KIND OF BRAYTON CYCLE

TURBINES ARE DRIVE BY "MASS" AND "HEAT"

THE ALLAM-FETVEDT CYCLE INCREASES MASS BY REPLACING THE N_2 IN THE AIR WITH A MUCH GREATER MASS OF CO_2

THE ALLAM-FETVEDT CYCLE RECUPERATES EXHAUST HEAT TO WARM THE CO_2 TO HIGH TEMPERATURES

THE SHARPLY INCREASED EFFICIENCIES ARE USED TO OFFSET THE PARASITIC LOADS OF AIR SEPARATION AND RECOMPRESSION

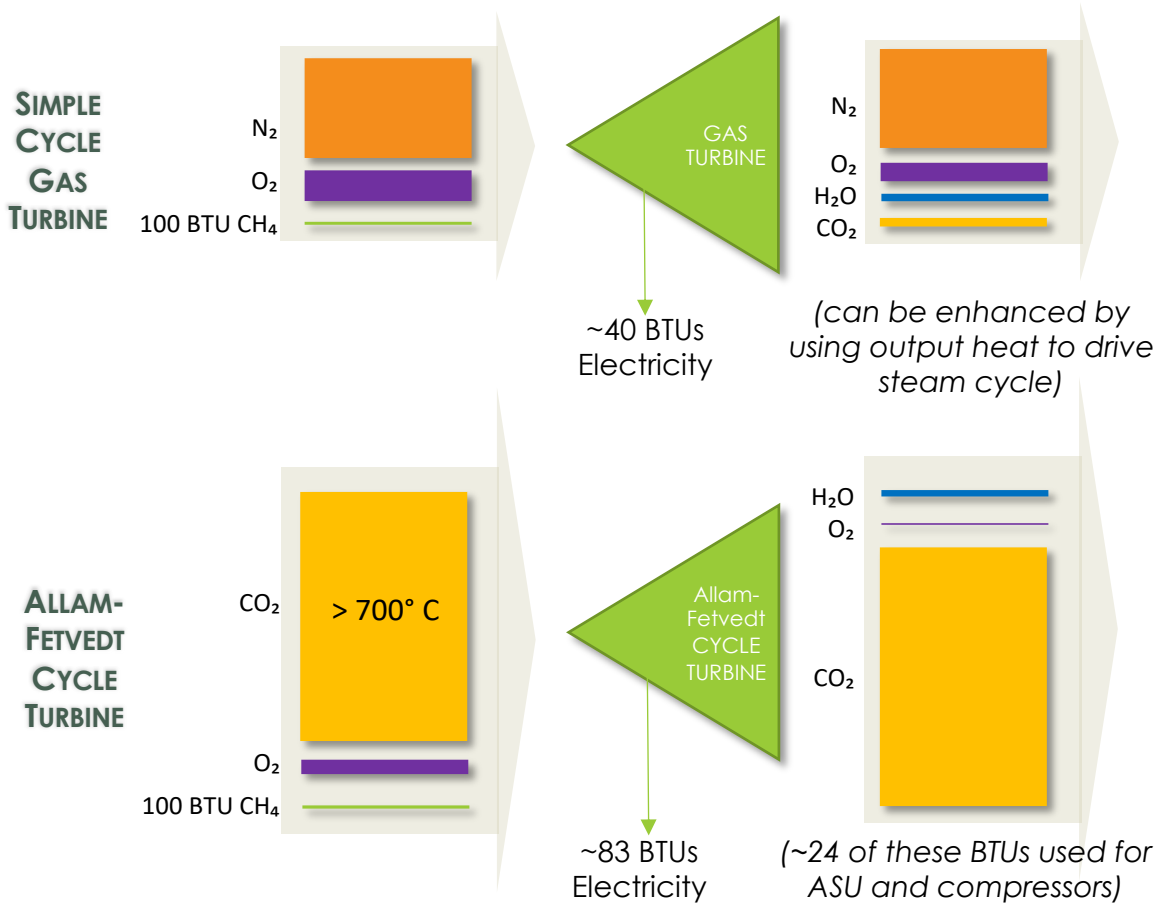

WIDTH OF LINES PROPORTIONAL TO MASS.

THE DEMAND FOR CO_2 IS SUBSTANTIAL

DEMAND FOR CO_2 FROM NET POWER PLANTS OUTSTRIPS IEA PROJECTIONS FOR NEW AND REPLACEMENT POWER PLANTS

Power

NUMBER OF NET POWER 300 MW PLANTS NEEDED BY REGION TO FULFILL NEW AND REPLACEMENT FOSSIL BUILDS

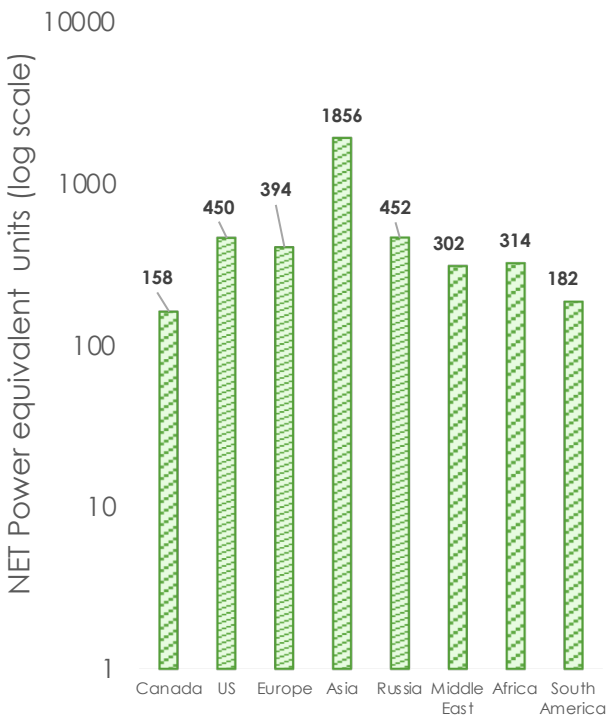

Power Demand to 2040 (IEA) (total units 4,108) (3.5 billion tpy CO_2)

CO_2

NUMBER OF NET POWER 300 MW PLANTS NEEDED FOR TO MEET CURRENT CO_2 DEMAND FOR EOR, ECBMR, AND CEMENT

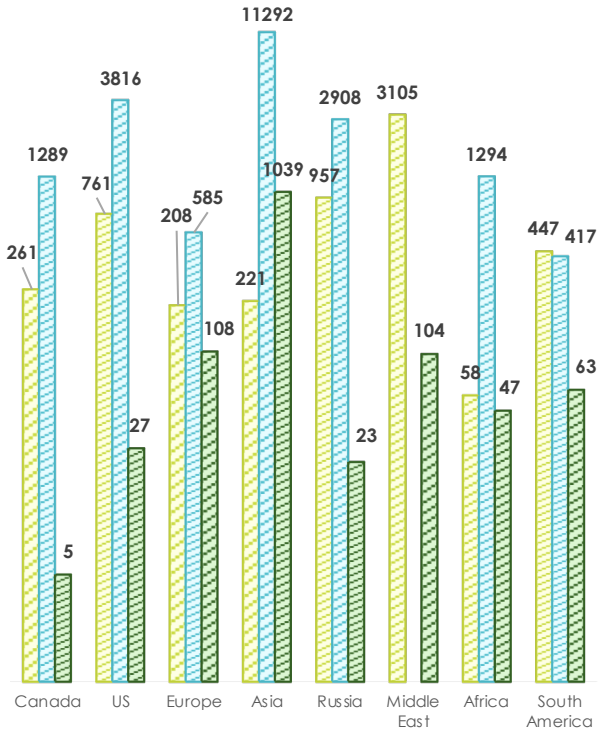

EOR Demand (Kuuskraa) (total unit 6,018) (4.9 billion tpy CO_2)

ECBMR Demand (Godec, Dipietro) (total units 21,601) (17.7 billion tpy CO_2)

Cement (USGS 2012) (total units 1415) (1.2 billion tpy CO_2)

THE NET POWER ADVANTAGE - THE ALLAM-FETVEDT CYCLE

THIS DIAGRAM HAS "PRESSURE" LOGARITHMICALLY SPACED UP AND DOWN.

AND "ENTHALPY" IS EVENLY SPACED FROM LEFT TO RIGHT. ENTHALPY IS A MEASURE OF ENERGY. AS YOU MOVE FROM LEFT TO RIGHT, YOU ARE INJECTING ENERGY *INTO* THE SYSTEM, AND VICE VERSA.

TEMPERATURE IS ON THE UP-DOWN BLUE LINES. TO THE RIGHT, THEY AND ENTHALPY MOVE TOGETHER.

THE "DOME" IS AN IMPORTANT LANDMARK. ABOVE THE TOP, CO_2 IS "SUPERCRITICAL". BELOW THE TOP AND TO THE RIGHT, CO_2 IS A GAS, AND TO THE LEFT, CO_2 IS A LIQUID. INSIDE, IT IS A MIXTURE OF GAS AND LIQUID.

ONE MORE THING. THE PURPLE LINES ARE "ENTROPY" LINES. THINK OF THESE AS RAILROAD TRACKS FOR GOING UP AND DOWN IN PRESSURE. IN THE TURBINE, THE TRACKS GO FROM UPPER RIGHT AND DOWN AND TO THE LEFT. THE LEFT-RIGHT DISTANCE IN ENTHALPY IS THE AMOUNT OF POWER THE TURBINE PRODUCES.

NOTE THAT ON THE LEFT, THESE RAILROAD TRACKS ARE STEEPER, AND THOSE FOR THE PUMP ARE STEEPER THAN THOSE FOR THE COMPRESSOR. THAT MEANS IT TAKES LESS ENERGY (LEFT-RIGHT) TO PUMP THAN TO COMPRESS.

ONE LAST THING. THE SYSTEM DESIGN POINT IS WHERE THE TURBINE DUMPS INTO THE HEAT EXCHANGER. ASK YOURSELF "WHY?"

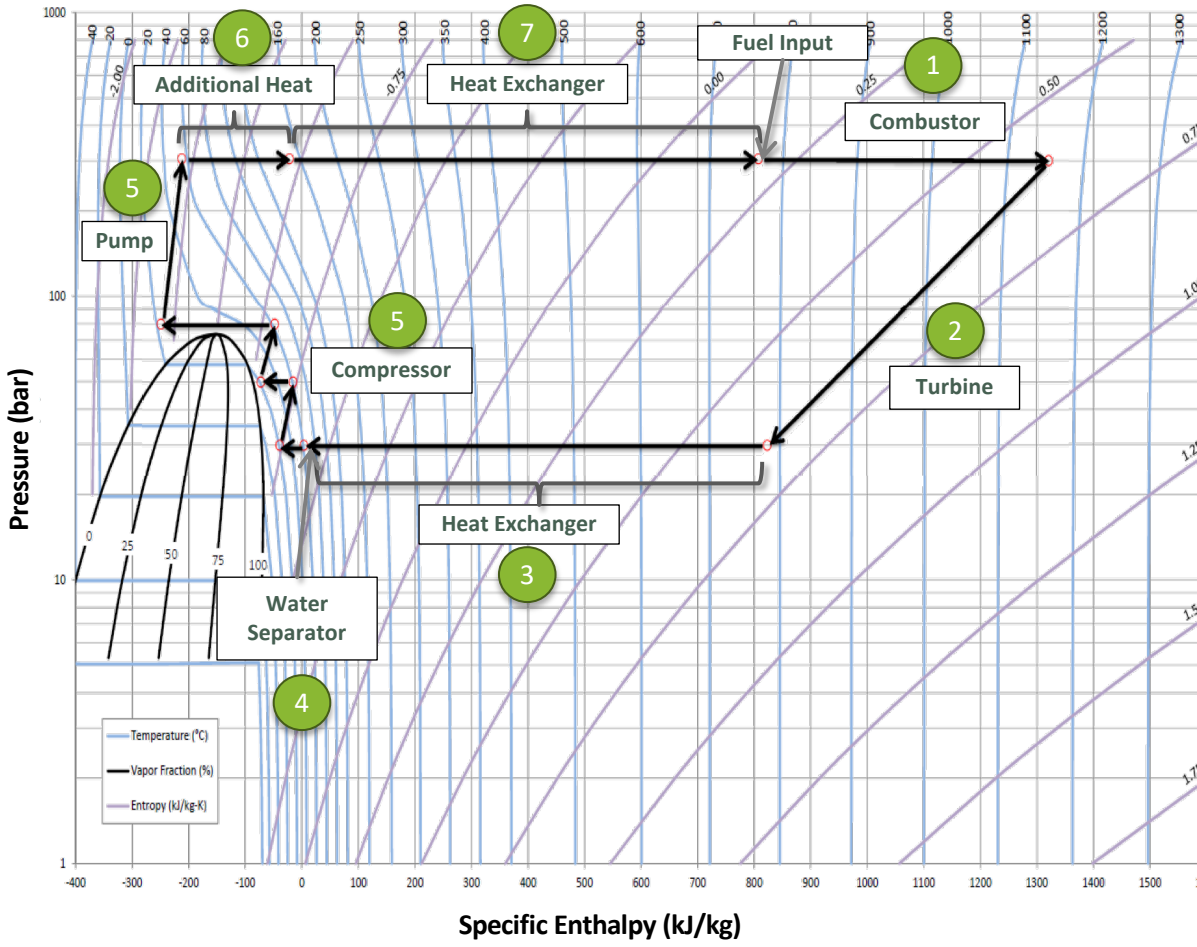

© 8 Rivers Capital, LLC

45Q TAX CREDIT FOR CO_2 CAPTURE AND STORAGE

ELIGIBLE FACILITIES CAN CLAIM CREDITS FOR UP TO 12 YEARS

JANUARY 1, 2024 DEADLINE TO COMMENCE CONSTRUCTION

IF CO_2 USED FOR EOR, MUST CAPTURE AT LEAST 500,000 TONNES/YEAR.

CREDITS ASSIGNED TO THE FACILITY OPERATOR, MAY BE TRANSFERRED TO THE CO_2 STORAGE ENTITY

- TAX LEGISLATION (45Q) PASSED IN THE U.S. IN FEB '18, PLACING SIGNIFICANT VALUE ON CAPTURED AND SEQUESTERED CO2
- TAX CREDIT VALUE IS $428M (PRE-TAX REAL VALUE BASIS) FOR A 2022 COD PROJECT WITH EOR

	EOR or Chemical Conversion	Sequestration
2021 (ramping from present to 2026)	$24/mt	$36/mt
2026 (ramped at inflation after 2026)	$35/mt	$50/mt

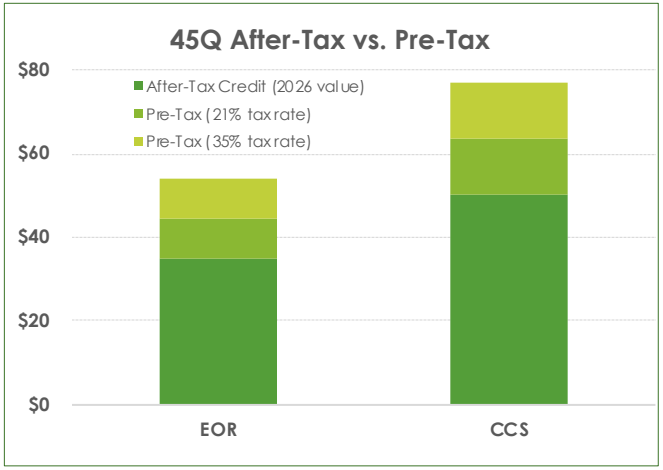

NET POWER COMPLEMENTS RENEWABLES

DEEP DECARBONIZATION, WITHOUT DIMINISHING RETURNS.

SOLAR AND WIND'S RELIANCE ON NATURAL GAS BACK-UP CEASES TO BE A CO_2 PROBLEM WITH NET POWER

Turns out wind and solar have a secret friend: Natural gas

By **Chris Mooney**

- NET POWER REMOVES SOLAR AND WIND'S RELIANCE ON COMBINED CYCLE
- IT PROVIDES PEAKING, BACK-UP, AND RAMPING, WITH ZERO CO_2.
- OUR RAMP RATE IS HIGHER THAN CCGT AND COMPARABLE TO CT
- EACH PLANT CAN CREATE >150 MWH OF ELECTRICITY STORAGE

NETPOWER'S ECONOMICS ARE DIFFERENT

- MOST CARBON CAPTURE PROJECTS STRUGGLE IN A HIGH RENEWABLES WORLD BECAUSE OF THE CHALLENGE OF LOW CAPACITY FACTORS.
- NET POWER RETAINS ITS ADVANTAGE OVER CCGT REGARDLESS OF CAPACITY FACTOR, BECAUSE NET POWER'S CAPEX-OPEX RATIO IS EQUIVALENT TO CCGT.

NET POWER

+1 (919) 667-1800

www.NETPower.com / www.8Rivers.com